Thermo Scientific Digital Drybath

Dry Bath with Advanced Microprocessor Control

Catalog Numbers:
88870001, 88870002
88870003, 88870004
88870005, 88870006
Operation Manual 0000848

Visit us online to register your warranty
www.thermoscientific.com/labwarranty

Thermo SCIENTIFIC

Safety Information

Alert Signals

Warning The warning message requires extremely careful operation of a certain step. Failure to observe the instruction may result in serious personal injury.

Caution Important information is contained in any item and should be carefully read. Failure to observe the instruction would result in damage or abnormal function of the instrument.

Note Notes alert you to pertinent facts and conditions.

Warning If the Thermo Scientific Digital Drybath is used in a manner not specified by the manufacturer, the protection provided by the unit may be impaired.

Thank you for selecting Thermo Scientific for your equipment needs.

Your Thermo Scientific Digital Drybath has been designed with functionality, reliability, and safety in mind. It is your responsibility to use this instrument in conformance with local electrical codes. It is very important that the user follows installation instructions exactly as written. Do not attempt operation without this information.

© All rights reserved. Thermo Fisher Scientific reserves the right to modify this manual at any time without notice. Without prior written consent from Thermo Fisher Scientific, any part of the manual should not be duplicated, reproduced or translated into any other languages.

MANUAL NUMBER 0000848

REV	ECR/ECN	DATE	DESCRIPTION	By
0	--	12/3/2014	Original	

Do You Need Information or Assistance on Thermo Scientific Products?

If you do, please contact us 8:00 a.m. to 6:00 p.m. (Eastern Time) at:

1-740-373-4763	Direct
1-800-438-4851	Toll Free, U.S. and Canada
1-877-213-8051	FAX
http://www.thermoscientific.com	Internet Worldwide Web Home Page
service.led.marietta@thermofisher.com	Tech Support Email Address
www.unitylabservices.com	Certified Service Web Page

Our **Sales Support** staff can provide information on pricing and give you quotations. We can take your order and provide delivery information on major equipment items or make arrangements to have your local sales representative contact you. Our products are listed on the Internet and we can be contacted through our Internet home page.

Our **Service Support** staff can supply technical information about proper setup, operation or troubleshooting of your equipment. We can fill your needs for spare or replacement parts or provide you with on-site service. We can also provide you with a quotation on our Extended Warranty for your Thermo Scientific products.

Whatever Thermo Scientific products you need or use, we will be happy to discuss your applications. If you are experiencing technical problems, working together, we will help you locate the problem and, chances are, correct it yourself...over the telephone without a service call.

When more extensive service is necessary, we will assist you with direct factory trained technicians or a qualified service organization for on-the-spot repair. If your service need is covered by the warranty, we will arrange for the unit to be repaired at our expense and to your satisfaction.

Regardless of your needs, our professional telephone technicians are available to assist you Monday through Friday from 8:00 a.m. to 6:00 p.m. Eastern Time. Please contact us by telephone or fax.

International customers, please contact your local Thermo Scientific distributor.

Table of Contents

Section 1 **Safety** **1-1**

Section 2 **Maintenance** **2-1**

Section 3 **Introduction** **3-1**

Section 4 **Features** **4-1**

Section 5 **Preparation Work** **5-1**

Section 6 **Operation Guidance** **6-1**

Examination Before Start-Up 6-1
Start-Up 6-1
Set the Temperature and Time Values 6-1
Start and Stop Instrument 6-2
Temperature Adjustment 6-2

Section 7 **Failure Analysis and Troubleshooting** **7-1**

Section 8 **Modular Block Accessories** **8-1**

Section 9 **Wiring Diagram** **9-1**

Section 10 **Warranty Information** **10-1**

Section 1 Safety

During operation, maintenance and repair of this instrument, the following basic safety notes should be observed. In case of failure to follow these instructions, the warnings or notes indicated herein, the basic protection provided by the instrument, its safety criteria of design and manufacture, and its predicted use range would be impaired. If the equipment is used in a manner not specified bythe manufacturer, the protection provided by the equipment may be impaired.
Thermo Fisher Scientific is not responsible for any injury as a result of the user's failure to observe the following requirements.

Caution This instrument is for indoor use. ▲

a) The ground connection

To avoid the electric shock, the input power line must be reliably grounded. The instrument is equipped with the three-pin plug that has the third pin (the pin connects the ground), therefore, the plug should be used with the grounded power socket only. This is a kind of safety device. If the plug cannot be plugged into the power socket, please ask the electrician to install a correct power socket, so as to make the grounded plug to work for safety.

b) Servicing and Replacement of Parts

The operator should not take apart the instrument without permission. Only qualified professionals are allowed to replace elements or adjust components inside the instrument. Replacement of components while unit is connected to power and/or turned on is prohibited.

c) Observe voltage/power requirements

Before the instrument is connected with the AC power source, the voltage of the power source should be the same with the required voltage of the instrument (a deviation of 10% is allowed). The rated load of the power socket should not be lower than the requirements of the instrument.

d) The power cord

The instrument should use the power line cord attached to it. If the power line is destroyed, it must be replaced but not be repaired. The replacement should be carried out with the power line of the same type and same specification. No items should be put on the power cord when the instrument is in operation.

e) Connecting and disconnecting from to power source

The user should hold the plug to remove from power source. When connecting the plug, user should make sure it has been fully plugged in; when removing the plug, do not pull the power line forcefully.

f) Placement of the instrument

This instrument should be fixed in a low RH and low dust place away from water source (e.g. sink or water pipeline) and the room should be well ventilated, and free of corrosive gas or interference of strong magnetic field. The instrument should not be placed in a wet or dusty location.

The openings on this instrument are for ventilation circulation and in order to avoid over-heat of the instrument body they should not be blocked or covered. When a single set of instrument is used, the interval between ventilation opening before and after the instrument and its nearest object should not be less than 25cm. Also, don't use the instrument on loose or soft surface, or the air inlet of instrument bottom might be blocked. Excessive temperature will impair performance or result in failure of instrument. This instrument should not be used in location subjected to direct sun light. The instrument should be kept away from hot gas, oven and all other heat sources. If the instrument is to be stored for a long time, the power plug should be withdrawn and the instrument covered with soft cloth or plastic film to avoid entrance of dust.
The product is powered by connecting the mains plug to a standard socket-outlet.Always place the product in such a way that it is easy for the operator to disconnect the product from the mains supply.

g) Explanation of symbols

Attention, read user manual before use.

Warning! There is a sign of "CAUTION: HOT SURFACE! ATTENTION: SURFACE HOT" on the instrument. The metal part (module) near the sign should not be touched with any part of the body when the instrument is operating in a high temperature state or just finished operation to avoid burns! ▲

Alternating Current

Protective Conductor Terminal

Caution In any of the following cases, immediately turn off the power supply, withdraw the power plug from the power socket, contact the supplier for service:

- Liquid drops into the inside of the instrument.
- The instrument is rained on or water is spilled on it.
- The instrument works abnormally, especially if generating an abnormal sound or odor.
- The instrument is dropped or its casing is damaged.
- The function of instrument obviously changes.

Section 2 Maintenance

The holes of the blocks should be regularly cleaned with the damp cloth to ensure the test tube be well contacted with the wall of the holes so as to have good heat conduction. If the surface of the instrument is polluted, it can be cleaned with a slightly damp soft cloth.

Warning When cleaning the instrument, the power supply should be shut off and unplugged. The instrument surface should be cleaned with a non-corrosive cleaning agent. ▲

Section 3 Introduction

The product is dry bath with advanced microprocessor control, which can be widely applied to sample reservation, enzyme reservation and reaction, DNA amplification, electrophoresis degeneration and serum coagulation, etc. The characteristics of the product are as follows:

- The digital display and control of the temperature.
- Heat blocks help avoid possible contamination while containing the sample inside a tube
- The heat blocks are easily replaced, clean or disinfect and are suitable for various tube sizes.
- Built-in over-temperature protection device warrants sample and user safety
- Temperature deviation adjustment.

Section 4 Features

This chapter introduces the usage, transportation, storage conditions of the instrument, as well as its basic parameters, performance and functions.

1. Normal working conditions

   Ambient temperature：10°C~30°C

   Relative humidity：≤80%

   Power supply：100-120V~50/60Hz or 200-240V~ 50/60Hz

   Altitude: Up to 2000 m Pollution degree: 2

   Overvoltage category : II Indoor use

Caution Before using the instrument, make sure the working conditions meet the above requirements, especially that the power line is reliably grounded.

2. Transportation and storage conditions

   Ambient temperature：-20°C~+55°C

   Relative humidity：≤80%

3. Basic parameters

Table 4-1: 100-120V

Parameters / Type	Digital 1 block 100-120V	Digital 2 block 100-120V	Digital 4 block 100-120V
Temperature Range	Ambient Temperature +5°C~130°C（ambient temperature 25°C）		
Temperature Uniformity	≤±1.0°C		
Temperature Accuracy	≤±0.5°C@37°C		
Temperature Fluctuation	≤±0.5°C		
Temperature Rise Time	≤20 min（rise from 30°C to 130°C）		≤25 min（rise from 30°C to 130°C）
Size (L×W×H)	288×200×100 mm 11.3×7.87×3.94 in	318×200×100 mm 12.5×7.87×3.94 in	450×200×100 mm 17.7×7.87×3.94 in
Weight	2.9 kg (6.39 lbs.)	3.3 kg (7.28 lbs.)	4.7 kg (10.36 lbs.)
Fuse Protector（ø5×20）	F 250V 2.5A	F 250V 5A	F 250V 8A

3. Basic Parameters (continued)

Table 4-2: 220V

Parameters / Type	Digital 1 block 200-240V	Digital 2 block 200-240V	Digital 4 block 200-240V
Temperature Range	Ambient Temperature +5°C~130°C（ambient temperature 25°C）		
Temperature Uniformity	≤±1.0°C		
Temperature Accuracy	≤±0.5°C@37°C		
Temperature Fluctuation	≤±0.5°C		
Temperature Rise Time	≤20 min（rise from 30°C to 130°C）		≤25 min（rise from 30°C to 130°C）
Size (L×W×H)	288×200×100 mm 11.3×7.87×3.94 in	318×200×100 mm 12.5×7.87×3.94 in	450×200×100 mm 17.7×7.87×3.94 in
Weight	2.9 kg (6.39 lbs.)	3.3 kg (7.28 lbs.)	4.7 kg (10.36 lbs.)
Fuse Protector（ø5×20）	F 250V 2.5A	F 250V 2.5A	F 250V 3.15A

Caution The instrument shall be used from low to high temperature.

Declaration of Conformity

We hereby declare under our sole responsibility that this product conforms with the technical requirements of the following standards:

CE EMC: EN 61326-1
CE Safety: EN 61010-1
CE Safety: EN61010-2-010
UL: 61010-1/CSA C22.2 NO. 61010-1
ROHS2.0: 2011/65/EU

Section 5 Preparation Work

This chapter introduces the structure of the instrument, user interface and functions of all buttons and preparation before startup. Read the content in the section carefully before startup when using the instrument for the first time.

1. Structure Diagram

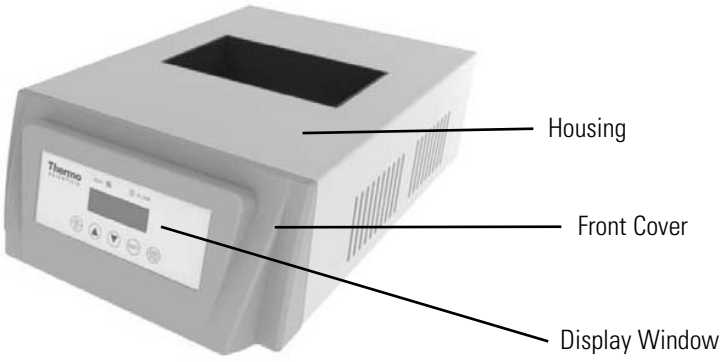

Figure 5-1. Unit Front

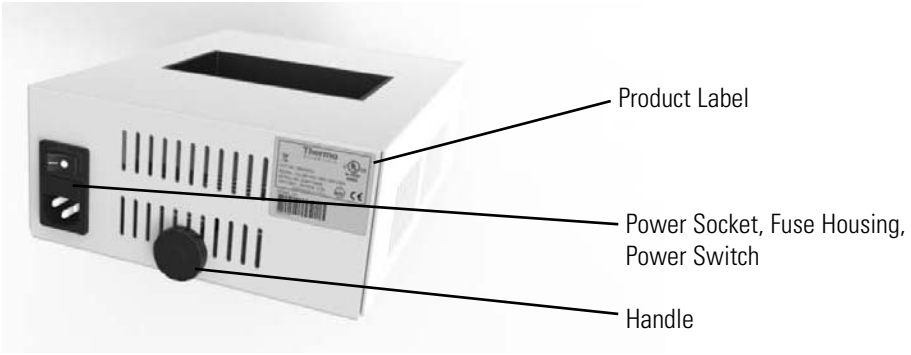

Figure 5-2. Unit Back

2. Display Panel Diagram

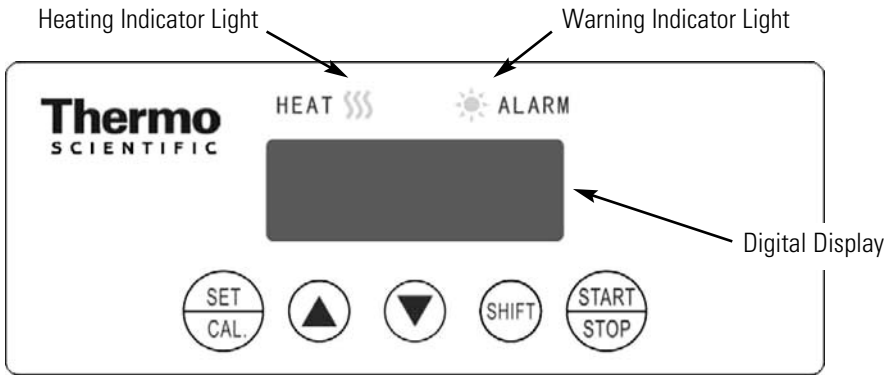

3. Instructions for Buttons

SET CAL. Setting or adjusting button: Press the button to display present setting temperature, and press the button again to display present time. After the unit has reached set point and temperature is stable, calibration can be set by pressing the button.

▼ ▲ Under the status of setting, press "▲" or "▼" to modify the flashing figure. The instrument will enter temperature calibration mode if press the two buttons simultaneously under the status of stopping.

SHIFT When setting or adjusting, pressing the button can move the flashing figure. During the operation, the display can be switched between the temperature and the time.

START STOP For starting up or stopping program

Section 6 Operation Guidance

The chapter introduces the display window and the operation of buttons of the dry bath with constant temperature.

Examination Before Start-Up

Confirm the following before inserting the plug into the power socket.

1. Ensure the power source is in accordance with the voltage requirement of the instrument (refer to Features section for voltage requirements).
2. Make sure the plug has been fully plugged into the power socket.
3. Ensure the power line has been reliably grounded.

Caution If the display of the instrument is abnormal after startup, turn off the power source immediately and contact the supplier. ▲

Start-Up

Press the power switch and the instrument will power on. All indicator lights and display serial ports will be turned on. About 3~5 seconds later, temperature display window will show the real-time temperature. All indicator lights will be turned off.

Set the Temperature and Time Values

When the instrument is not running, press “SET/CAL.”, the instrument will enter setting status. At that time, temperature display window shows the previous temperature value with the first figure on the left flashing. Press “SHIFT”, the flashing place can be moved, press “▲”or “▼”to increase or decrease the flashing figure.

When the temperature is set, press “SET/CAL.” to enter into the time setting mode and the time display window shows the previous time value with the first figure on the left flashing. Press “SHIFT”, the flashing place can be moved, press “▲”or “▼”to increase or decrease the flashing figure.

Wait for 5 seconds after setting, and do not operate the instrument. After 5 seconds, the instrument will automatically exit, setting the status. The temperature window will show real-time temperature.

Instruction: There is limitation for temperature and time setting. The setting temperature range is: 15~135°C； the time range is: 0~99h59min and continuous mode “--:--”.

Start and Stop Instrument

Press “START/STOP” to start operation. At this time, the indicator light “HEAT” will be flashing. When the instrument achieves the setting temperature, the “HEAT” light will stop flashing. This indicates that the unit will enter Hold Temperature status. The digital display window will display the real-time temperature, and the timing function by pressing “SHIFT” button.

When the holding time equals the setting time, the instrument will alarm 5 times. Under the working status, press “START/STOP” to stop working. At that time, corresponding working indicator light “HEAT” will be turned off. The digital display window displays the real-time temperature.

Temperature Adjustment

During operation, when the instrument temperature isstabilized, the “HEAT” light will stop flashing. Press “SET/CAL.” to enter into Temperature Adjusting status. At that time, the digital display window shows the temperature value that needs to be adjusted with the first figure on the left flashing. Press “SHIFT” to move the flashing place and press “▲”or “▼”to increase or decrease the flashing figure. Adjust the display temperature to the actually verified temperature and then press “SET/CAL.”. The instrument will drop out of Adjusting status and continue to work.

Caution

1. To ensure the accuracy of temperature, the instrument shall be calibrated after temperature stabilizes for 30 minutes.
2. Calibrate the instrument with qualified Grade II standard filled thermometer
3. Calibration point: The middle hole of the heat block. Fill with paraffin oil and soak the thermometer bulb.

Section 7 Failure Analysis and Troubleshooting

This chapter details possible failures of this instrument, an explanation and troubleshooting.

Failure Analysis and Troubleshooting			
No.	**Error**	**Cause**	**Solution**
1	Display window is not turned on after switching on power supply	Power supply fails to be connected	Check power supply and connect it
		Fuse burned out	Replace fuse
		Damage of the switch	Replace the switch
		Others	Contact Thermo Fisher Scientific
2	Temperature display window shows “001” and the buzzer alarms in a di…di…sound	Short circuit of sensor	Check whether the connecting wire of sensor is damaged, and replace it
3	Temperature display window shows “002” and the buzzer alarms in a di…di…sound	Open circuit of sensor	Check whether the connecting wire of sensor is damaged, and replace it
5	Temperature display does not conform to actual temperature	Sensor is damaged or in poor contact	Contact Thermo Fisher Scientific

Caution The user is not allowed to open the housing of the instrument for inspection during the warranty period. If any failures result from opening the housing for inspection, contact Thermo Fisher Scientific. ▲

Modular Block Accessories:		
HEATING BLOCKS	**NO.OF HOLES**	**CAT NO**
For 6mm test tubes	46	88870101
For 10mm test tubes	28	88870102
For 1.5ml test tubes	28	88870103
For 2.0ml test tubes	28	88870104
For 12mm & 13mm test tubes	24	88870105
For 15mm & 16mm test tubes	15	88870106
For 17mm & 18mm test tubes	12	88870107
For 20mm test tubes	8	88870108
For 25mm test tubes	6	88870109
For 0.5ml test tubes	40	88870110
For 96 well Elisa plate	1	88870111
For mixed size test tubes; 32 holes for 6mm test tubes 21 holes for 10mm test tubes	32 + 21	88870112
For mixed size test tubes; 18 holes for 1.5ml test tubes 10 holes for 2.0ml test tubes	18 + 10	88870113
For mixed size test tubes 3 holes for 25mm test tubes 12 holes for 13mm test tubes 6 holes for 6mm test tubes	3 +12 + 6	88870114
For mixed size test tubes; 30 holes for 0.5ml test tubes 20 holes for 0.2ml test tubes	30 + 20	88870115
For 15 ml flat bottom test tubes	15	88870116
For 50 ml flat bottom test tubes	4	88870117
For 15ml conical bottom test tubes	15	88870118
For 50ml conical bottom test tubes	4	88870119
For 96 well none skirted PCR plate	1	88870120
For 96 well half / full skirted PCR plate	1	88870121

Section 9: Wiring Diagram

(The page is just for reference and is subject to change without prior notice)

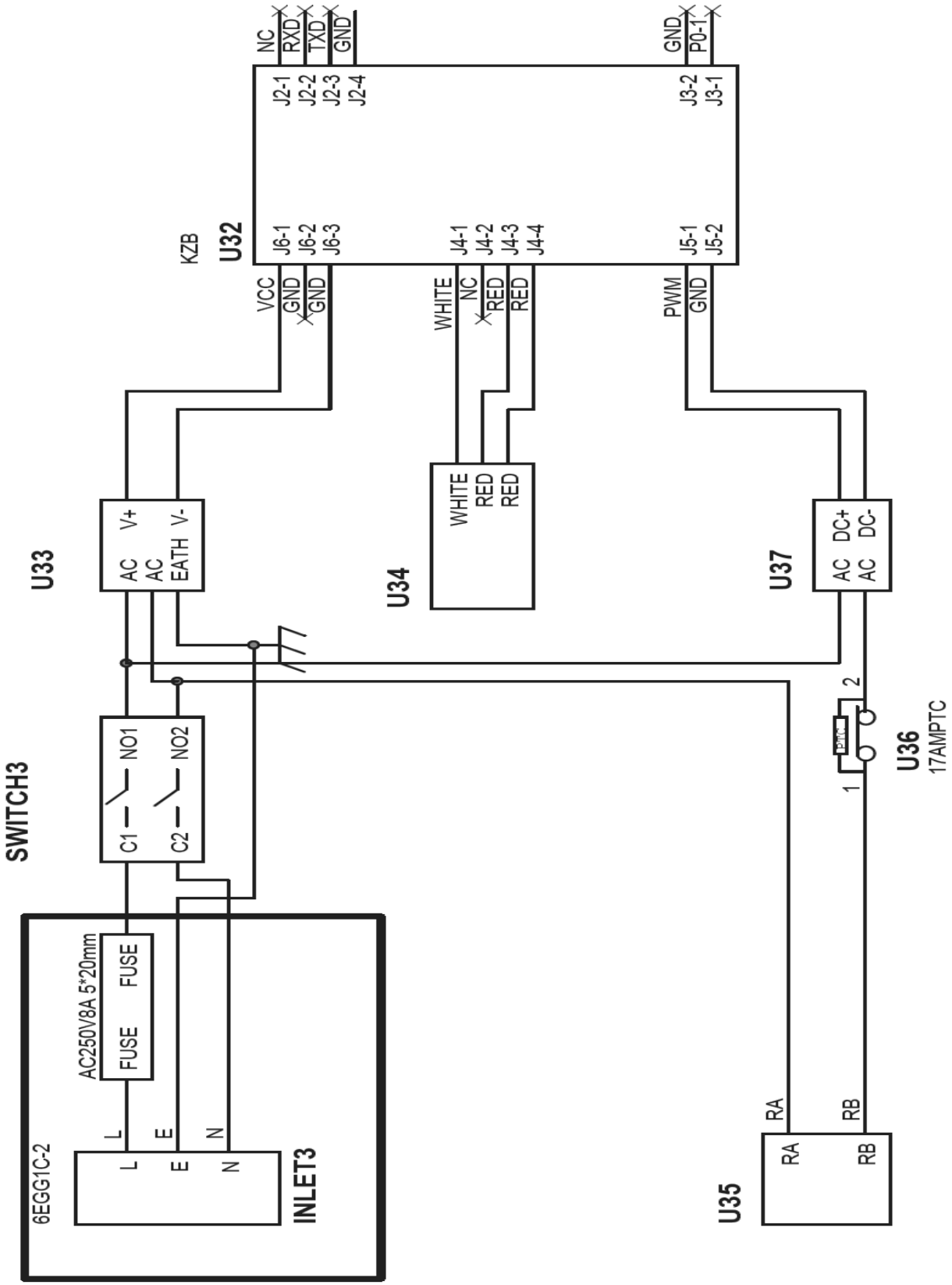

THERMO FISHER SCIENTIFIC STANDARD PRODUCT WARRANTY

The Warranty Period starts two weeks from the date your equipment is shipped from our facility. This allows for shipping time so the warranty will go into effect at approximately the same time your equipment is delivered. The warranty protection extends to any subsequent owner during the first year warranty period.

During the first two (2) years, component parts proven to be non-conforming in materials or workmanship will be repaired or replaced at Thermo's expense, labor included. Installation and calibration are not covered by this warranty agreement. The Technical Services Department must be contacted for warranty determination and direction prior to performance of any repairs. Expendable items, glass, filters and gaskets are excluded from this warranty.

Replacement or repair of components parts or equipment under this warranty shall not extend the warranty to either the equipment or to the component part beyond the original warranty period. The Technical Services Department must give prior approval for return of any components or equipment. At Thermo's option, all non-conforming parts must be returned to Thermo Fisher Scientific postage paid and replacement parts are shipped FOB destination.

THIS WARRANTY IS EXCLUSIVE AND IN LIEU OF ALL OTHER WARRANTIES, WHETHER WRITTEN, ORAL OR IMPLIED. NO WARRANTIES OF MERCHANTABILITY OR FITNESS FOR A PARTICULAR PURPOSE SHALL APPLY. Thermo shall not be liable for any indirect or consequential damages including, without limitation, damages relating to lost profits or loss of products.

Your local Thermo Sales Office is ready to help with comprehensive site preparation information before your equipment arrives. Printed instruction manuals carefully detail equipment installation, operation and preventive maintenance.

If equipment service is required, please call your Technical Services Department at 1-800-438-4851 (USA and Canada) or 1-740-373-4763. We're ready to answer your questions on equipment warranty, operation, maintenance, service and special application. Outside the USA, contact your local distributor for warranty information.

Rev. 0 9/13

thermoscientific.com

© 2014 Thermo Fisher Scientific Inc. All rights reserved. All trademarks are the property of Thermo Fisher Scientific and its subsidiaries. Specifications, terms and pricing are subject to change. Not all products are available in all countries. Please consult your local sales representative for details.

For the name of the authorized Thermo Scientific product dealer nearest you or any additional information, contact us:

North America: USA / Canada +1-866-984-3766 (866-9-Thermo), www.thermo.com

Europe: Austria +43 1 801 40 0, Belgium +32 2 482 30 30, France +33 2 2803 2180, Germany national toll free 08001-536 376, Germany international +49 6184 90 6940, Italy +39 02 02 95059, 434-254-375, Netherlands +31 76 571 4440, Nordic/Baltic countries +358 9 329 100, Russia / CIS +7 (812) 703 42 15, Spain / Portugal +34 93 223 09 18, Switzerland +41 44 454 12 12 , UK/Ireland +44 870 609 9203.

Asia: China +86 21 6865 4588 or +86 10 8419 3588, India toll free 1 800 22 8374, India +91 22 6716 2200, Japan +81 45 453 9220, Other Asian countries +852 2885 4613.

Countries Not Listed: +49 6184 90 6940 or +33 2 2803 2180

Thermo SCIENTIFIC

A Thermo Fisher Scientific Brand