polystat®

Refrigerated Circulators

User's Manual

Manual P/N U00971
Rev. 02/14/08

PolyStat® Refrigerated Circulator

Instruction and Operation Manual

Preface

Safety

General Information

Installation

Operation

Digital Controller

Advanced Digital Controller

Programmable Controller

Additional Features

Maintenance & Troubleshooting

Appendix

Preface

Compliance

Products tested and found to be in compliance with the requirements defined in the EMC standards defined by 89/336/EEC as well as Low Voltage Directive (LVD) 73/23/EEC can be identified by the CE Mark on the rear of the unit. The testing has demonstrated compliance with the following directives:

LVD, 73/23/EEC	Complies with IEC/EN61010-1
EMC, 89/336/EEC	IEC/EN61326-1

For any additional information, refer to the Declaration of Conformity that shipped with the unit.

Unpacking

Retain all cartons and packing material until the unit is operated and found to be in good condition. If the unit shows external or internal damage contact the transportation company and file a damage claim. Under ICC regulations, this is your responsibility.

Warranty

The Cole-Parmer circulators distributed by Cole-Parmer, Cole-Parmer warrants to the direct purchaser that the product will be free from defects in material or workmanship for a period of two years from the date of delivery. Cole-Parmer will repair or replace the product or provide credit, as its sole option, upon prompt notification and compliance with its instructions.

The Distributor warrants to Customer that upon prompt notification and compliance with Distributor's instructions, that the Distributor will repair or replace, at Distributor's sole option, any Product which is defective in material or workmanship.

Distributor expressly disclaims all other warranties, whether expressed, implied or statutory, including the warranties of merchantability, and fitness for a particular purpose. Distributor's sole responsibility and the Customer's exclusive remedy for any claim arising out of the purchase of any Product is repair or replacement, as described above. In no event shall Distributor's liability exceed the purchase price pain therefor; nor shall Distributor be liable for any claims, losses or damage of any third party or for lost profits or any special, indirect, incidental, consequential, or exemplary damages, howsoever arising, even if Distributor has been advised of the possibility of such damages.

Safety

Warnings

In addition to the safety warnings listed below, warnings are posted throughout the manual. These warnings are designated by an exclamation mark inside an equilateral triangle with text highlighted in bold print. Read and follow these important instructions. Failure to observe these instructions can result in permanent damage to the unit, significant property damage, personal injury or death.

The lightning flash with arrow symbol, within an equilateral triangle, is intended to alert the user to the presence of non-insulated "dangerous voltage" within the unit's enclosure. The voltage may be of significant magnitude to constitute a risk of electrical shock.

This label, engraved into the front of the tank lip, indicates the presence of hot surfaces.

Make sure you read and understand all instructions and safety precautions listed in this manual before installing or operating your unit. If you have any questions concerning the operation of your unit or the information in this manual, contact our Sales Department.

Performance of installation, operation, or maintenance procedures other than those described in this manual may result in a hazardous situation and may void the manufacturer's warranty.

Transport the unit with care. Sudden jolts or drops can damage the unit's components.

Observe all warning labels.

Never remove warning labels.

Never operate damaged or leaking equipment.

Never operate the unit without fluid in the circulator.

Use water unless operating above 80°C or below 7°C. Above 80°C use Dow 200 silicon oil. For operation below 7°C, a 50/50 mixture, by volume, of filtered tap water and laboratory grade ethylene glycol is suggested.

Always turn off the unit and disconnect the line cord from the power source before performing any service or maintenance procedures, or before moving the unit.

Always empty the circulator before moving the unit.

Never operate equipment with damaged line cords.

Refer service and repairs to a qualified technician.

General Information

Description

The PolyStat® Refrigerated Circulators are designed to provide temperature control for applications requiring a fluid work area or pumping to an external system.

The units consist of a circulation pump, stainless steel reservoir, a work area cover, and a temperature controller.

Specifications

	R6L	R6LP	R13L	R28L
Temperature Range °C[1]				
Digital	-20 to +150	-20 to +150	-30 to +150	-25 to +100
Advanced Digital	-20 to +200	-20 to +200	-30 to +200	-25 to +100
Programmable	-20 to +200	-20 to +200	-30 to +200	-25 to +100
Temperature Stability[2]				
Digital	±0.05	±0.05	±0.05	±0.05
Advanced Digital	±0.01	±0.01	±0.01	±0.01
Programmable	±0.01	±0.01	±0.01	±0.01
Pumping Capacity[3]				
60Hz	15 lpm at 0 psig	15 lpm at 0 psig	15 lpm at 0 psig	15 lpm at 0 psig
50Hz	12 lpm at 0 psig	12 lpm at 0 psig	12 lpm at 0 psig	12 lpm at 0 psig
Cooling Capacity Watts (60Hz/50Hz)[1]				
@+20°C	350 / 290	350 / 290	660[4] / 545[4]	700[4] / 580[4]
@ 0°C	120 / 100	190 / 175	480 / 400	450 / 370
@ -10°C	90 / 75	90 / 85	-	-
@-20°C	-	-	200 / 165	175 / 145
Heater Watts				
60/50Hz	800 / 1000	800 / 1000	800 / 1000	800 / 1000
Circulator Work Area (L x W x D)				
Inches	5¼ x 8 x 6	5¼ x 8 x 6	5¼ x 9 x 8	11½ x 11¼ x 8
Centimeters	13.3 x 20.3 x 15.2	13.3 x 20.3 x 15.2	13.3 x 22.9 x 20.3	29.2 x 28.6 x 20.3
Reservoir Volume				
Gallons/Liters	1½ / 6	1½ / 6	3 7/16 / 13	7 3/8 / 28
Dimensions (L x W x H)				
Inches	15¾ x 10 x 21½	15¾ x 18¾ x 15 5/8	17 5/8 x 15 x 26 1/8	22 x 27½ x 18 5/8
Centimeters	40.0 x 25.4 x 54.6	40.0 x 47.6 x 39.7	44.8 x 38.1 x 66.4	55.9 x 69.9 x 47.4
Shipping Weight				
Pounds/Kilograms	79 / 36	70 / 32	112 / 51	162 / 73

1. Low-end temperatures and cooling capacities achieved using a fluid with a specific gravity of 0.5.
2. Stability is measured at fluid temperature of 20°C, ambient of 20°C, with water as the fluid and not in maximum cooling mode.
3. Pumping capacity for units operating at fluid temperature of 20°C, ambient of 21°C, using water.
4. 20°C heat load data taken in maximum cooling mode.
5. R28L shipping weight includes a 23 pound (10 Kilograms) skid.

Installation

Site

Never place the unit in a location where excessive heat, moisture, or corrosive materials are present.

Locate the unit on a sturdy table or bench top.

Ambient Temperature Range	+50°F to +89.6°F (+10°C to +32°C)
Relative Humidity Range	10% to 80% (non-condensing)
Operating Altitiude	Sea Level to 2000 meters (6562 feet)
Overvoltage Category	II
Pollution Degree	2

The unit has an air-cooled refrigeration system. Air is drawn through the front panel and discharged through the rear panel. The unit must be positioned so the air intake and discharge are not impeded. A minimum clearance of 12 inches (30 centimeters) at the front and rear of the unit is necessary for adequate ventilation. Inadequate ventilation will reduce cooling capacity and, in extreme cases, can cause compressor failure.

Excessively dusty areas should be avoided and a periodic cleaning schedule should be instituted, see Cleaning on page 26.

Electrical Requirements

Line voltage may be easily accessible inside the pump/control box. Always unplug the unit prior to removing the pump/control box cover.

The unit construction provides protection against the risk of electric shock by grounding appropriate metal parts. The protection may not function unless the power cord is connected to a properly grounded outlet. It is the user's responsibility to assure a proper ground connection is provided.

Refer to the serial number label on the rear of the unit to identify the specific electrical requirements of your unit.

Ensure the voltage of the power source meets the specified voltage, ±10%.

Electrical Service Required:

R6L/R6LP

Voltage	Frequency	Phase	Branch Circuit Requirements	Line Cord Plug
115 VAC	60 Hz	1	15 A	N5 - 15P
230 VAC	50 Hz	1	10 A	CEE7

R13L/R28L

Voltage	Frequency	Phase	Branch Circuit Requirements	Line Cord Plug
115 VAC	60 Hz	1	20 A	N5 - 20P
230 VAC	50 Hz	1	16 A	CEE7

Plumbing Requirements

Ensure the unit is off before connecting tubing to the unit.

To prevent damage to the plumbing lines, always support the ¾" fittings while installing/removing the pumping caps and lines.

Hose Connections

The pump connections are located at the rear of the pump box and are labelled (pump outlet) and (pump inlet). The connections are capped with stainless steel serrated plugs.

The pump lines have ¼ inch male pipe threads for mating with standard plumbing fittings. For your convenience two stainless steel adapters, ¼ inch female pipe thread to 3/8 inch O.D. serrated fitting, are provided. (To ensure proper fit, they should be installed using PTFE tape around the threads.)

Flexible tubing, if used, should be of heavy wall or reinforced construction. Make sure all tubing connections are securely clamped. Avoid running tubing near radiators, hot water pipes, etc. If substantial lengths of tubing are necessary, insulation may be required to prevent loss of cooling capacity.

It is important to keep the distance between the unit and the external system as short as possible, and to use the largest diameter tubing practical. Tubing should be straight and without bends. If diameter reductions must be made, make them at the inlet and outlet of the external system, not at the unit.

If substantial lengths of cooling lines are required, they should be pre-filled with bath fluid before connecting them to the unit. This will ensure that a adequate amount of fluid will be in the circulator once it is in operation.

Pumping

The pump is designed to deliver a flow of 15 liters/minute (4 gallons per minute) at 0 feet head. To prevent external circulation, the INLET and OUTLET lines are capped. The caps must be removed when external circulation is required.

To properly secure the external hose connections to the unit, wrap PTFE tape around the pipe line threads before installation. Once the hose connections are made, the pump must be properly plumbed to an external system. *It is important the circulator is not in operation until all plumbing is complete.*

If the circulator is not used for external circulation, make sure the stainless steel caps are in place prior to operating the circulator.

Fluids

Never use flammable or corrosive fluids with this unit.

Water is the recommended fluid for operation from +7°C to +80°C, see the Appendix.

Dow 200 silicon oil is recommended for operation above +80°C.

Due to potential fire hazard, do not use any other fluid above +80°C.

For operation below +7°C, a 50/50 mixture, by volume, of laboratory grade ethylene glycol and filtered tap water is suggested.

Never use pure ethylene glycol as a fluid. A maximum 80/20 mixture of ethylene glycol and filtered tap water is allowed.

Filling Requirements

The circulator work area has a high and low level marker to guide filling. The markers are 1 inch horizontal slits located in the center of the stainless steel baffle separating the work area and the pump assembly. The correct fluid level falls between these two markers. The heating and cooling coils will be exposed and may become damaged if the correct fluid level is not provided.

When pumping to an external system, keep extra fluid on hand to maintain the proper level in both the circulating lines and external system.

Never run the unit when the work area is empty.

When using Dow 200-50, ensure the work area contains no water before filling the unit.

Dow 200-50 fluid will expand when heated.

Operation

Controllers

Three temperature controllers are available with the unit: Digital, Advanced Digital and Programmable. This section explains these three controllers.

Start Up

Before starting the unit, check all electrical and plumbing connections and make sure the work area has been properly filled with fluid.

To start any unit place the I/O switch on the side of the controller to the **I** (power on) position. The pump will start and the controller display will light.

For units with the Digital Controller the refrigeration is manually controlled by the ON/OFF switch on the side of the control box.

For units with standard controllers, the refrigeration is manually controlled by the ON/OFF switch on the side of the control box. In addition, units R13L and R28L have HI/LO refrigeration control. For optimal cooling, use HI when operating at 20°C or below, otherwise use LO.

The refrigeration system is not designed to operate above 35°C. When operating above 35°C ensure that the refrigeration is turned off.

If the FAULT light is illuminated see page 25.

NOTE: When the unit is shut off, wait approximately five minutes before restarting. This allows time for the refrigeration pressures to equalize. If the pressures are not allowed to equalize, the compressor will short-cycle (clicking sound) and no cooling will occur.

Digital Controller

The Digital Controller consists of a seven-segment LCD, unit-temperature status indicators, a three-button keypad and a user-adjustable Proportional, Integral and Derivative (PID) control.

Main Display

The LCD Main Display normally indicates the fluid temperature.

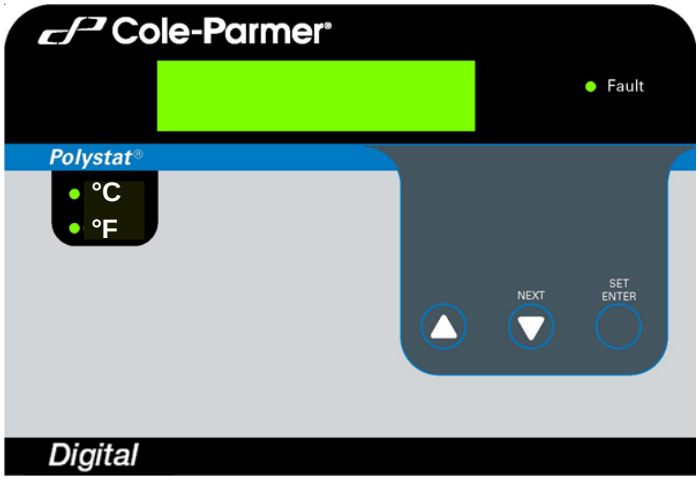

Key Button Definition

SET ENTER is used to change the current value or status of a function within the software, and then to "accept" the new value or function.

NEXT is used as a means to quickly scroll through the software loops and settings.

The up and down arrow keys are used to change a numeric value.

Viewing Setpoint

The setpoint is the desired fluid temperature. To view the setpoint, press **SET ENTER**. The current setpoint will flash. Press **SET ENTER** again to return to the temperature display.

Changing Setpoint

To change the setpoint, press **SET**. The current setpoint will flash. Use the arrow keys to change the setpoint. Scrolling includes three speed acceleration. Press **ENTER** to accept the new setpoint. **NOTE:** If you do not press **ENTER**, a time out will occur 30 seconds after the last key is pressed and the old setpoint will be used.

Setup Loop

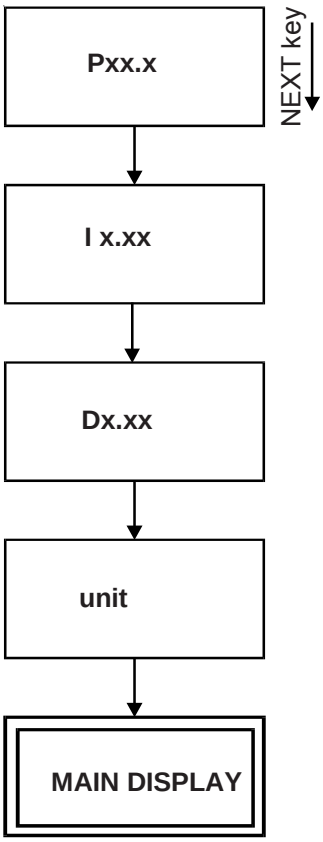

The setup loop is used to adjust the PID control and change the temperature scale. (Preset PID values are P = 1.2, I = 0.20, D = 0.05.) To enter the setup loop, from the main display press and hold **NEXT** for three seconds. The display will indicate **Pxx.x. NOTE:** If a key is not depressed within 60 seconds, a "time out" will occur and the main display will revert to the fluid temperature.

Press **SET** and the number will start flashing. Use the arrow keys to change the value. Press **ENTER** to accept the new value. Press **NEXT** to display the I parameter **Ix.xx**.

Press **SET** and the number will start flashing. Use the arrow keys to change the value. Press **ENTER** to accept the new value. Press **NEXT** to display the D parameter **Dx.xx**.

Press **SET** and the number will start flashing. Use the arrow keys to change the value. Press **ENTER** to accept the new value. Press **NEXT** to display **unit**.

Press **SET** and the currently selected temperature scale lamp flashes. Use either arrow key to change the scale. Press **ENTER** to accept the new scale. Press **NEXT** to display the temperature.

Calibration Loop

Use the calibration loop to recalibrate the unit's temperature display. The wider the temperature spread used, the more accurate the calibration. **NOTE:** Changing the factory set calibration will affect the accuracy of the controller. A time out is not used in this loop.

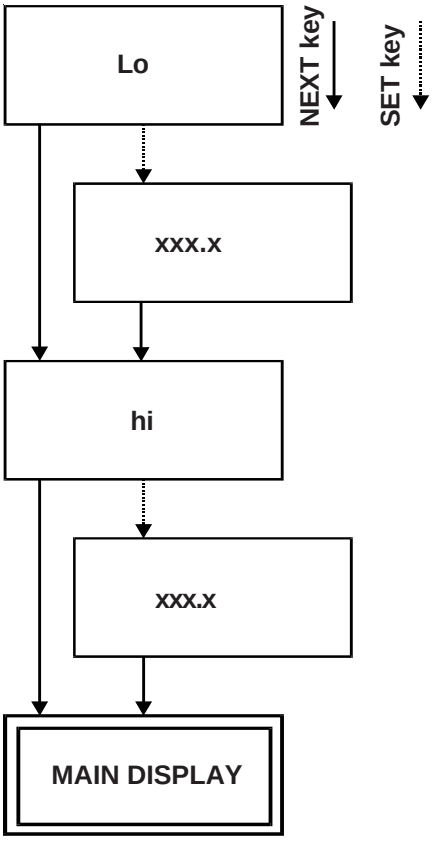

To enter the calibration loop, from the main display press and hold the up arrow key while pressing **ENTER - NEXT - ENTER**. The display will indicate **Lo** (low calibration temperature).

Press **SET** and the low calibration temperature will flash indicating it can be changed. **NOTE:** Pressing **NEXT** instead of **SET** scrolls to the high temperature calibration.

Use the arrow keys to change the displayed value to the actual fluid temperature. Press **ENTER** to accept and the numbers will stop flashing. **NOTE:** The calibration will adjust to the temperature value read at the moment **ENTER** is pressed. Press **NEXT** to display **hi** (high calibration temperature).

Press **SET** and the high calibration temperature will flash indicating it can be changed. **NOTE:** Pressing **NEXT** instead of **SET** scrolls to **Lo**, the cold temperature calibration.

Use the arrow keys to change the displayed value to the actual fluid temperature. Press **ENTER** to accept and the numbers will stop flashing. **NOTE:** The calibration will adjust to the temperature value read at the moment **ENTER** is pressed. Press **NEXT** to calibrate.

The calibration constants are calculated and **GOOD** or **BAD** is briefly displayed to indicate whether the calibration was accepted. The display will then indicate the fluid temperature.

Advanced Digital Controller

Main Display

The Advanced Digital controller consists of a seven-segment LCD Display with contrast control, heating/cooling status indicators, a four-button keypad and user adjustable 0.1° or 0.01° display resolution. It also features on/off refrigeration control, automatic min/max refrigeration control, audio/visual alarm messages, user selected high/low temperature limits, RS232 communication, and a user-adjustable Proportional, Integral and Derivative (PID) control.

The LCD Main Display indicates the fluid temperature as well as the current setpoint temperature.

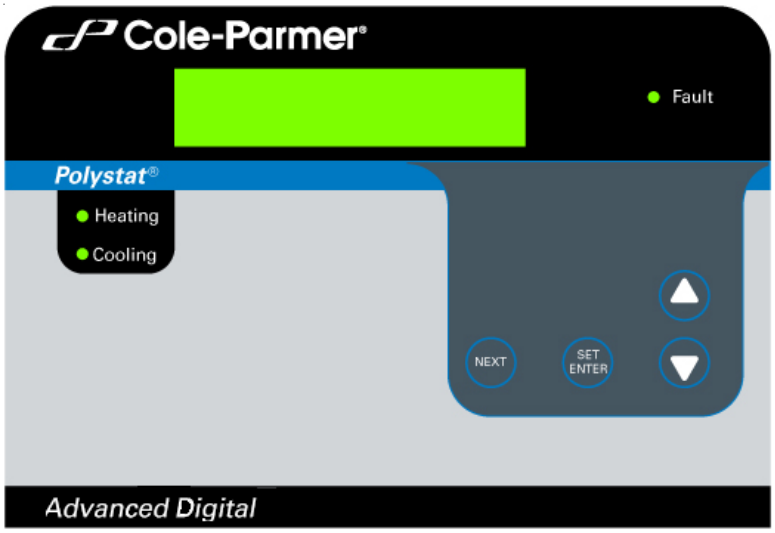

Key Button Definition

SET ENTER is used to change the current value or status of a function within the software, and then to "accept" the new value or function.

The up and down arrow keys are used to change a numeric value and to confirm, change or reject a question asked within the software.

The up and down arrow keys are used to change a numeric value.

Viewing Setpoint

The setpoint is the desired fluid temperature. To view the setpoint, press **SET ENTER**. The current setpoint will flash. Press **SET ENTER** again to return to the temperature display.

Changing Setpoint

To change the setpoint, press **SET**. The current setpoint will flash. Use the arrow keys to change the setpoint. Scrolling includes three speed acceleration. Press **ENTER** to accept the new setpoint. **NOTE:** If you do not press **ENTER**, a time out will occur 30 seconds after the last key is pressed and the old setpoint will be used.

Setup Loop

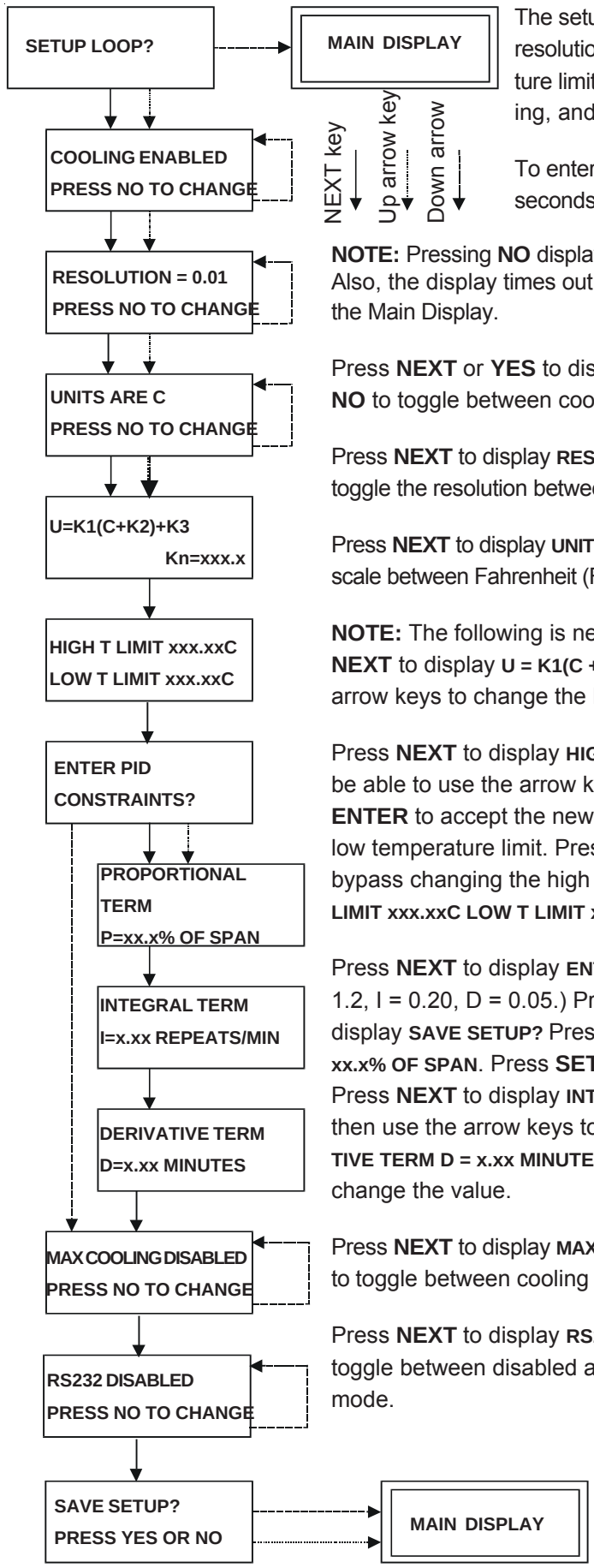

The setup loop is used to enable cooling, change the display resolution, change the temperature scale, change temperature limits, adjust the PID values, enable/disable max cooling, and enable/disable RS232 communications.

To enter the setup loop, press and hold **NEXT** for three seconds. The display will indicate **SETUP LOOP?**

NOTE: Pressing **NO** displays the software version and then the Main Display. Also, the display times out 60 seconds after any key is pressed and reverts to the Main Display.

Press **NEXT** or **YES** to display **COOLING ENABLED PRESS NO TO CHANGE**. Press **NO** to toggle between cooling enabled and cooling disabled.

Press **NEXT** to display **RESOLUTION = 0.01 PRESS NO TO CHANGE**. Press **NO** to toggle the resolution between 0.1° and 0.01°.

Press **NEXT** to display **UNITS ARE C PRESS NO TO CHANGE**. Press **NO** to toggle the scale between Fahrenheit (F), Celsius (C) or a user (U) scale.

NOTE: The following is needed only if a user (U) scale was selected. Press **NEXT** to display **U = K1(C + K2) + K3 Kn=xxx.x**. Press **SET** and then use the arrow keys to change the K values.

Press **NEXT** to display **HIGH T LIMIT xxx.xxC LOW T LIMIT xxx.xxC**. Press **SET** to be able to use the arrow keys to change the high temperature limit. Press **ENTER** to accept the new value. Press **SET** again to be able to change the low temperature limit. Press **ENTER** to accept the new value. **NOTE:** To bypass changing the high temperature value press **SET** twice when **HIGH T LIMIT xxx.xxC LOW T LIMIT xxx.xxC** is initially display.

Press **NEXT** to display **ENTER PID CONSTANTS?** (Preset PID values are P = 1.2, I = 0.20, D = 0.05.) Press **NO** to bypass changing the constants and display **SAVE SETUP?** Press **YES** or **NEXT** to display **PROPORTIONAL TERM P = xx.x% OF SPAN**. Press **SET** and then use the arrow keys to change the value. Press **NEXT** to display **INTEGRAL TERM I = x.xx REPEATS/MIN**. Press **SET** and then use the arrow keys to change the value. Press **NEXT** to display **DERIVATIVE TERM D = x.xx MINUTES**. Press **SET** and then use the arrow keys to change the value.

Press **NEXT** to display **MAX COOLING DISABLED PRESS NO TO CHANGE**. Press **NO** to toggle between cooling modes.

Press **NEXT** to display **RS232 IS DISABLED PRESS NO TO CHANGE**. Press **NO** to toggle between disabled and enabled, or press **ENTER** to use the displayed mode.

Press **NEXT** to display **SAVE SETUP? PRESS YES OR NO**. Press **YES** to accept all the changes. Press **NO** to ignore all of them. With either choice the unit will return to the Main Display.

Calibration Loop

NOTE: The Calibration Loop is not accessible if RS232 communications is enabled.

Use the calibration loop to calibrate the RTD temperature probe. The wider the temperature spread used, the more accurate the calibration. **NOTE:** Changing the factory set calibration will affect the accuracy of the controller. A time out is not used in this loop.

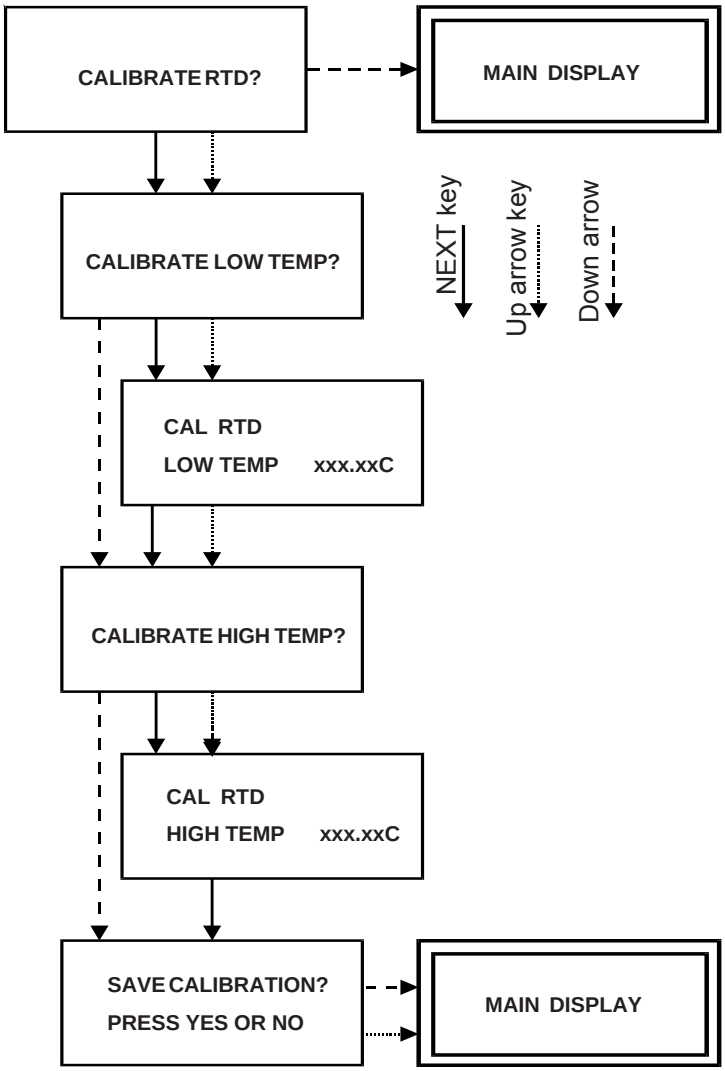

Run the temperature to a suitable low-end value. Once stabilized enter the calibration loop. From the main display press and hold **NEXT** while pressing, within three seconds, **ENTER - NO - ENTER**. The display will indicate **CALIBRATE RTD?**

Press **NEXT** and the display indicates **CALIBRATE LOW TEMP?** To perform a low temperature calibration press **YES** or **NEXT** and the display will indicate **CAL RTD LOW TEMP xxx.xxC**. Press **SET** and then use the arrow keys to change the displayed value to the actual fluid temperature (as measured with a calibrated reference thermometer). Press **NEXT** until the display indicates **SAVE CALIBRATION PRESS YES OR NO**. Press **YES** to save the change. The display will momentarily indicate **BOTH HIGH AND LOW CAL MUST BE DONE** then return to the main display.

Run the temperature to a suitable high-end value. Once stabilized reenter the calibration loop. Press **YES** or **NEXT** until the display indicates **CALIBRATE HIGH TEMP?** To perform a high temperature calibration press **NEXT** and the display will indicate **CAL RTD HIGH TEMP xxx.xxC**. Press **SET** and then use the arrow keys to change the displayed value to the actual fluid temperature (as measured with a calibrated reference thermometer).

Press **NEXT** and the display will indicate **SAVE CALIBRATION PRESS YES OR NO**. Press **YES** to save the change. The unit will return to the main display.

Programmable Controller

The Programmable Controller consists of a seven-segment LCD with contrast control, heating/cooling status indicators, a 12-button keypad and user adjustable 0.1° or 0.01° temperature display resolution, external sensor input with automatic switching in the event of external sensor failure. It also features automatic on/off refrigeration control, automatic min/max refrigeration control, audio/visual alarm messages, automatic fixed temperature limit, user selected high/low temperature limits, programmable temperature profile, RS-232 communication and a user-adjustable Proportional, Integral and Derivative (PID) control.

Main Display

The LCD normally indicates the fluid temperature as well as the current setpoint temperature, or the external temperature and setpoint.

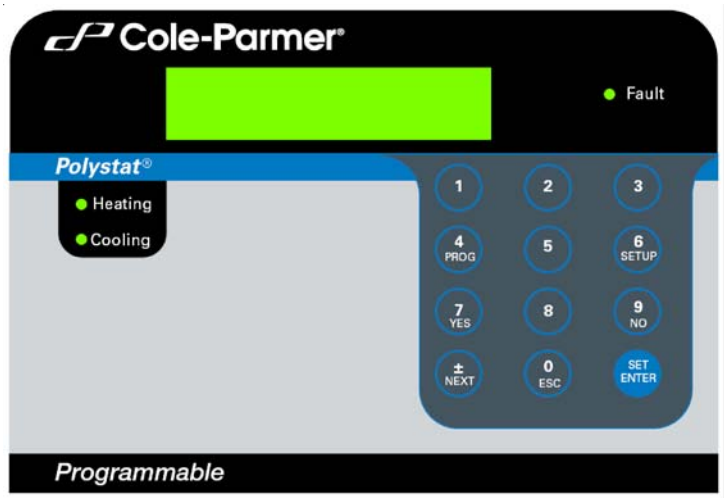

Key Button Definition

SET ENTER is used to change the current value or status of a function within the software, and then to "accept" the new value or function.

YES is used to confirm a question asked within the software.

NO is used to reject or change a function within the software.

NEXT is used as a means to quickly scroll through the software loops and settings.

± is used to change the current numeric value from positive to negative, or negative to positive.

SETUP is used to enter the controller's setup loop.

PROG is used to enter the controller's program loop.

ESC is used to backtrack to the previous screen within a software loop.

1 - 9 keys are used to enter a number.

Changing Setpoint

To change the setpoint, press **SET ENTER**. The current setpoint will flash. If the number to be entered is negative, press the ***+/-*** key. Otherwise, enter the most significant digit of the number. The digit will appear in the least significant decimal position. As each digit is entered the previously entered digits will shift up in significance. Enter trailing zeros as needed to obtain the desired order of magnitude. Press **SET ENTER** to accept the new setpoint. **NOTE:** If you do not press **SET ENTER**, a time out will occur 30 seconds after the last key is pressed and the old setpoint will be used.

Program Loop

NOTE: The program loop is not accessible if the RS-232 communications is enabled, see Setup Loop. The program loop is used to program the controller.

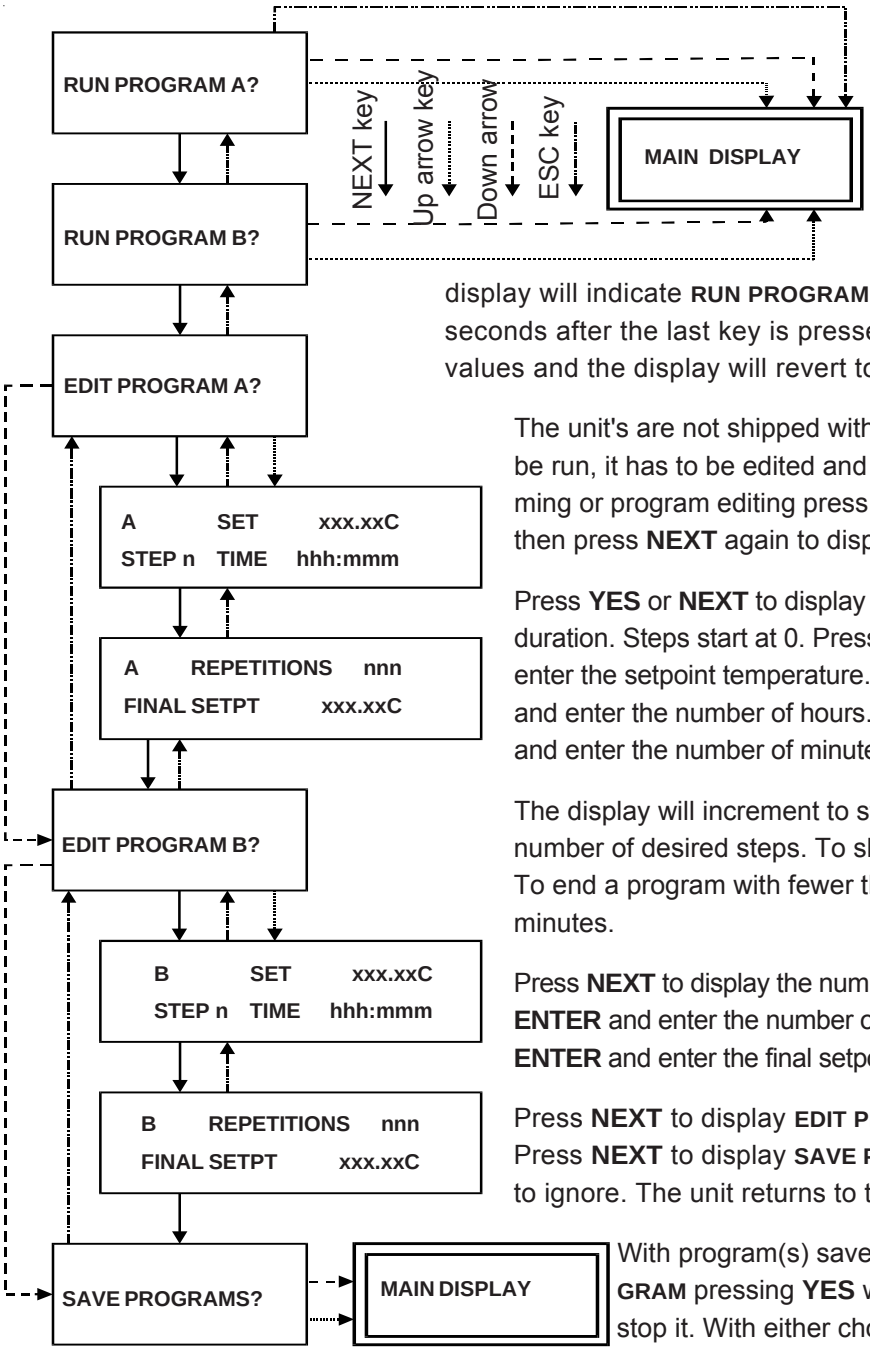

The controller can store up to two programs, each with as many as ten steps. (Refer to the Setup Loop on the next page for other options.) A sample program is shown on page 22.

To enter the program loop, press and hold **PROG** for three seconds. The display will indicate **RUN PROGRAM A?** **NOTE:** A time out will occur 60 seconds after the last key is pressed and the program will revert to old values and the display will revert to the fluid temperature.

The unit's are not shipped with stored programs. Before a program can be run, it has to be edited and stored. Therefore, for initial programming or program editing press **NEXT** to display **RUN PROGRAM B?** and then press **NEXT** again to display **EDIT PROGRAM A?**

Press **YES** or **NEXT** to display the temperature, step number and time duration. Steps start at 0. Press **SET ENTER** and using the keypad enter the setpoint temperature. Press **SET ENTER**. Press **SET ENTER** and enter the number of hours. Press **SET ENTER**. Press **SET ENTER** and enter the number of minutes. Press **SET ENTER**.

The display will increment to step 1. Repeat the procedure for the total number of desired steps. To skip a number press **SET ENTER** twice. To end a program with fewer than ten steps, enter 0 hours and 0 minutes.

Press **NEXT** to display the number of program repetitions. Press **SET ENTER** and enter the number of reps. Press **SET ENTER**. Press **SET ENTER** and enter the final setpoint for the program. Press **SET ENTER**.

Press **NEXT** to display **EDIT PROGRAM B?** Use the same procedures. Press **NEXT** to display **SAVE PROGRAMS?** Press **YES** to save or **NO** to ignore. The unit returns to the main display.

With program(s) saved, when the display reads **RUN PROGRAM** pressing **YES** will start the program, pressing **NO** will stop it. With either choice the unit returns to the main display.

Setup Loop

NOTE: The setup loop is not accessible if a program is running. If RS-232 communications is enabled, only the RS-232 portion of the setup loop is active.

The setup loop is used to enable refrigeration, change the display resolution, change the temperature scale, change temperature limits, adjust the PID control (preset PID values are P = 1.2, I = 0.20, D = 0.05.), selects internal or external probe, enter the maximum internal and external temperature difference and enable RS-232.

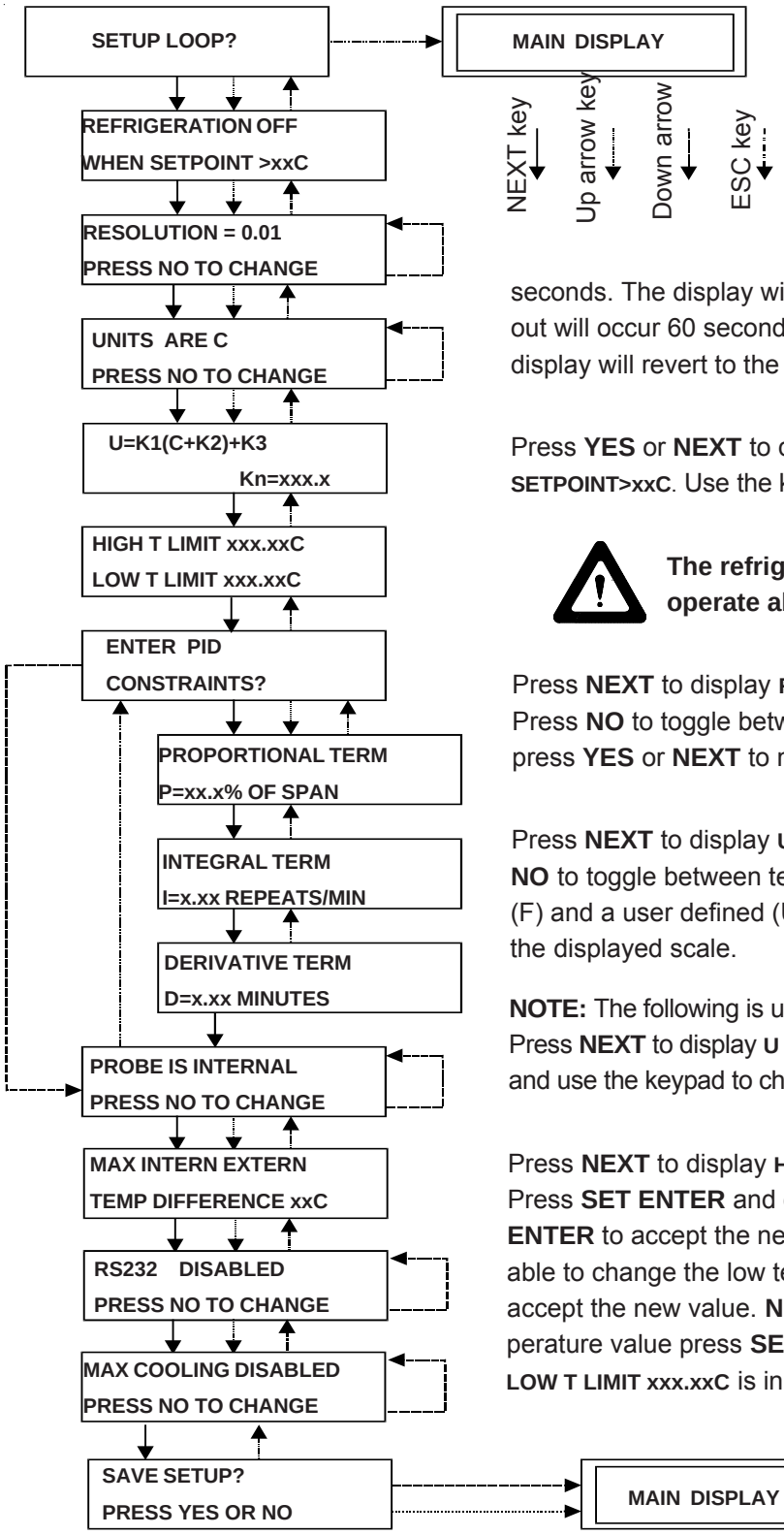

To enter the setup loop from the main display, press and hold **SETUP** for three seconds. The display will indicate **SETUP LOOP? NOTE:** A time out will occur 60 seconds after the last key is pressed and the display will revert to the fluid temperature.

Press **YES** or **NEXT** to display **REFRIGERATION OFF WHEN SETPOINT>xxC**. Use the keypad to display the desired temperature.

The refrigeration system is not designed to operate above 35°C.

Press **NEXT** to display **RESOLUTION = 0.01 PRESS NO TO CHANGE**. Press **NO** to toggle between 0.1°C and 0.01°C display resolution, press **YES** or **NEXT** to maintain the displayed resolution.

Press **NEXT** to display **UNITS ARE C PRESS NO TO CHANGE**. Press **NO** to toggle between temperature scales Celsius (C), Fahrenheit (F) and a user defined (U) scale. Press **YES** or **NEXT** to maintain the displayed scale.

NOTE: The following is used only if a user (U) scale was selected. Press **NEXT** to display **U = K1(C + K2) + K3 Kn=xxx.x**. Press **SET ENTER** and use the keypad to change the values.

Press **NEXT** to display **HIGH T LIMIT xxx.xxC LOW T LIMIT xxx.xxC**. Press **SET ENTER** and enter the high temperature limit. Press **SET ENTER** to accept the new value. Press **SET ENTER** again to be able to change the low temperature limit. Press **SET ENTER** to accept the new value. **NOTE:** To bypass changing the high temperature value press **SET ENTER** twice when **HIGH T LIMIT xxx.xxC LOW T LIMIT xxx.xxC** is initially display.

Press **NEXT** to display **ENTER PID CONSTANTS?** Press **NO** to

bypass changing the constants and display **PROBE IS INTERNAL PRESS NO TO CHANGE** or press **NEXT** to display **PROPORTIONAL TERM P = xx.x% OF SPAN**. Press **SET ENTER** and use the keypad to enter the desired value.

Press **NEXT** to display **INTEGRAL TERM I = x.xx REPEATS/MIN**. Press **SET ENTER** and use the keypad to enter the desired value.

Press **NEXT** to display **DERIVATIVE TERM D = x.xx MINUTES**. Press **SET ENTER** and use the keypad to enter the desired value.

Press **NEXT** to display **PROBE IS INTERNAL PRESS NO TO CHANGE**. Press **NO** to toggle between internal or external probe or press **YES** or **SET ENTER** to use the displayed probe.

Press **NEXT** to display **MAX INTERN EXTERN TEMP DIFFERENCE xxC**. Press **SET ENTER** and use the keypad to enter the desired value.

Press **NEXT** to display **RS232 IS DISABLED PRESS NO TO CHANGE**. Press **NO** to toggle between disabled and enabled or press **YES** or **SET ENTER** to use the displayed mode.

Press **NEXT** to display **MAX COOLING DISABLED PRESS NO TO CHANGE**. Press **NO** to toggle between disabled and enabled or press **YES** or **SET ENTER** to use the displayed mode.

Press **NEXT** to display **SAVE SETUP? PRESS YES OR NO**. Press **YES** to accept the changes. Press **NO** to ignore them. The unit will return to the main display.

Calibration Loop

NOTE: The calibration loop is not accessible if a program is running or if RS-232 communications is enabled.

Use the calibration loop to calibrate the internal and external RTD temperatures. **NOTE:** Changing the factory set calibration will affect the accuracy of the controller. A time out is not used in this loop.

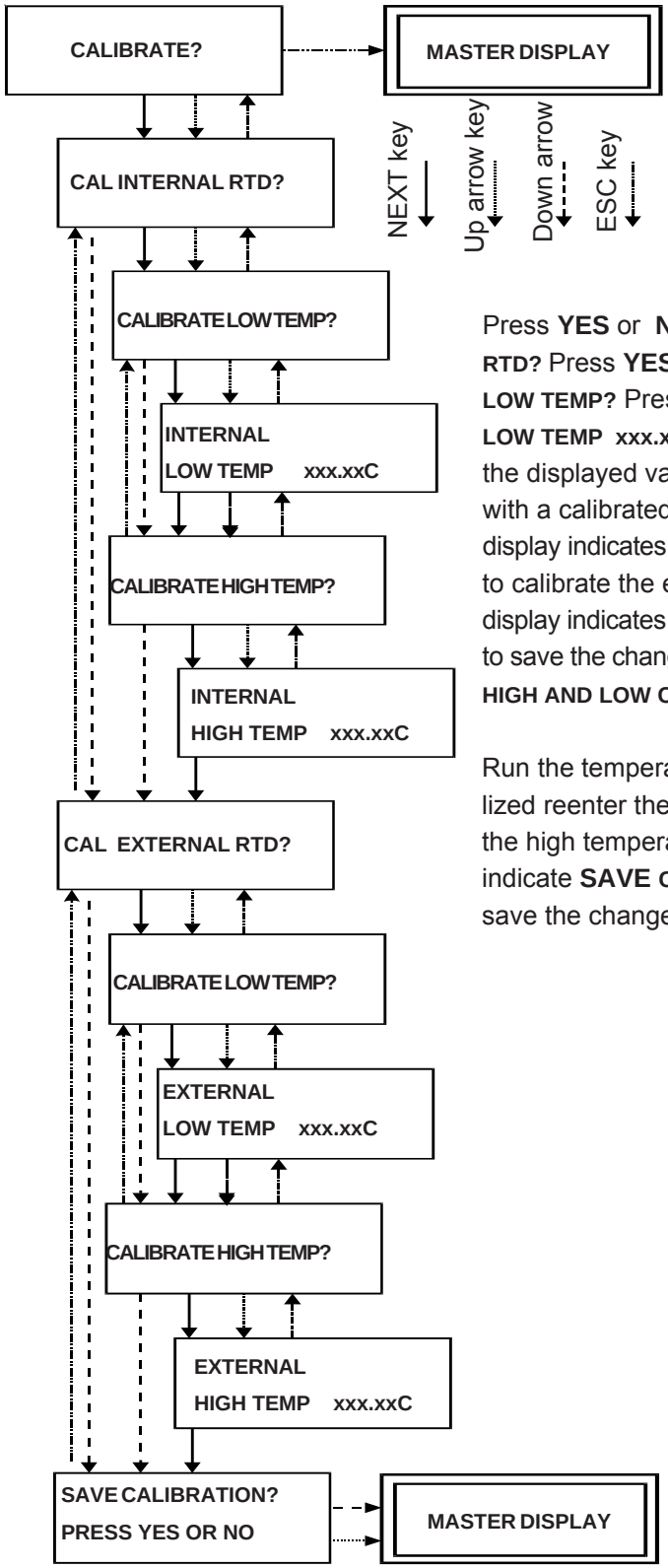

Run the temperature to a suitable low-end value. Once stabilized enter the calibration loop. From the main display press and hold **NEXT** while pressing **ESC - ENTER - ESC**. The display will indicate **CALIBRATE?**

Press **YES** or **NEXT** and the display indicates **CAL INTERNAL RTD?** Press **YES** or **NEXT** and the display indicates **CALIBRATE LOW TEMP?** Press **NEXT** and the display indicates **INTERNAL LOW TEMP xxx.xxC**. Press **SET** and use the keypad to change the displayed value to the actual fluid temperature (as measured with a calibrated reference thermometer). Press **NEXT** until the display indicates **CAL EXTERNAL RTD?** Use the same procedure to calibrate the external probe (if desired). Press **NEXT** until the display indicates **SAVE CALIBRATION PRESS YES OR NO**. Press **YES** to save the changes. The display will momentarily indicate **BOTH HIGH AND LOW CAL MUST BE DONE** then return to the main display.

Run the temperature to a suitable high-end value. Once stabilized reenter the calibration loop. Repeat the same procedure for the high temperature calibration. Press **NEXT** and the display will indicate **SAVE CALIBRATION? PRESS YES OR NO**. Press **YES** to save the changes. The unit will return to the main display.

Sample Program

This sample program A has three steps and two repetitions. The final setpoint is 35.0°C. Enter these values as described on page 18.

Stepn	SETxxx.xxC	TIME	hhh	mmm
0	25.0		0	2
1	20.0		0	3
2	30.0		0	1
3	NA*		0	0

REPETITIONS	nnnn	FINAL SETPT	xxx.xC
	2		35.0

* Any value can be entered.

Pressing **YES** to **RUN PROG A?** returns to the MAIN DISPLAY which now has a lower line reading:

PGM A 0 w 25.0C

A is the current program, 0 is the current step, w indicates a waiting phase (described in the next paragraph) and 25.0 is the current setpoint.

A w is displayed when the program is waiting for the bath to heat or cool from the previous setpoint to the current setpoint. When the bath temperature gets to within 0.5° of the current setpoint, the display changes to **PGM A 0 r 25.0**, the r indicating the running phase for that step. Actual step time starts when the display turns to r.

The following graph displays this program and indicates the lower half of the MAIN DISPLAY.

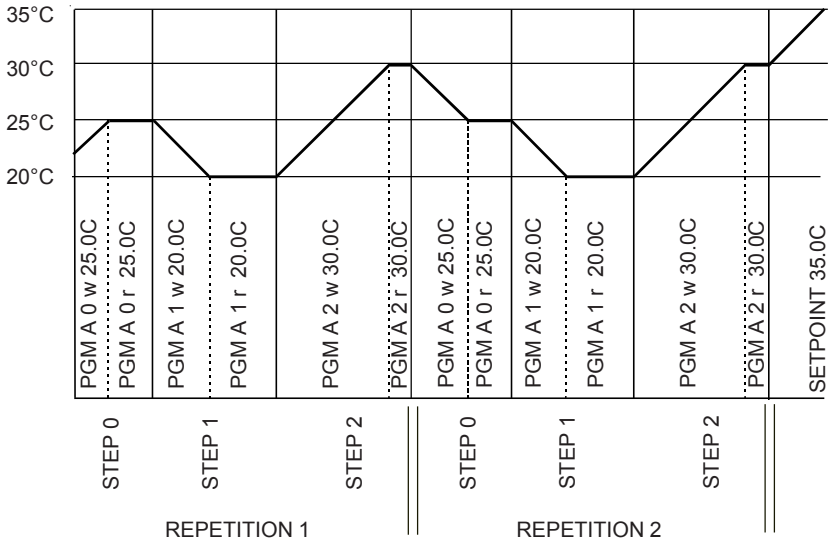

NOTE: There is no indication on the display as to which repetition the program is in.

Additional Features

DB9 Connector Pinouts

RS232 Connections DB9 Female (J3)

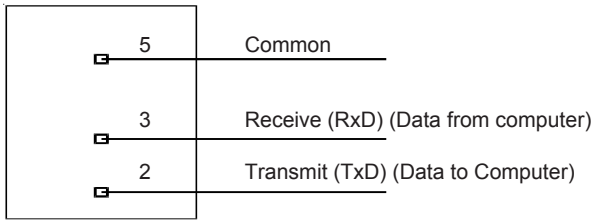

External RTD DB9 Male (P2)

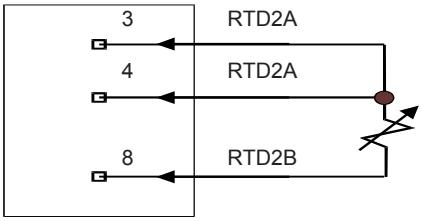

RS232 Serial Communications Protocol

Baud rate:	9600	Stop bits:	1
Parity:	none	Flow control:	none
Data bits:	8		

Commands (UPPERCASE only)	Description	Response
?[CR]	Help	Protocol Examples
A1[CR]	Reports “OK” to indicate that RS232 is enabled	[CR]OK[CR][CR]
S?[CR]	Report temperature setpoint	n[CR]OK[CR][CR]
Sn[CR]	Change temperature setpoint to n	[CR]OK[CR][CR]
F?[CR]	Report bath temperature	n[CR]OK[CR][CR]
U?[CR]	Report bath temperature units (x = C, F or U)	x[CR]OK[CR][CR]
C[CR]	Change temperature units to °C	[CR]OK[CR][CR]
F[CR]	Change temperature units to °F	[CR]OK[CR][CR]
U[CR]	Change temperature units to °U (user defined units)	[CR]OK[CR][CR]
&LH?[CR]	Report high temperature limit	n[CR]OK[CR][CR]
&LL?[CR]	Report low temperature limit	n[CR]OK[CR][CR]
&LHn[CR]	Change high temperature limit to n	[CR]OK[CR][CR]
&LLn[CR]	Change low temperature limit to n	[CR]OK[CR][CR]
&P?[CR]	Report temperature resolution (number of decimal places)	n[CR]OK[CR][CR]
&Pn[CR]	Change temperature resolution (n = 1 or 2)	[CR]OK[CR][CR]

[CR] = carriage return
n = numeric data

Error Messages	Description
INPUT OR RANGE ERROR[CR][CR]	Controller received a setpoint that was out of range.
REQUEST DENIED[CR][CR]	Setpoint can be changed only while: Displaying temperature A value is not currently being entered Not in program mode.

High Temperature/ Low Liquid Level Safety

To protect your application, the adjustable High Temperature/Low Liquid Level Safety (HIGH TEMP/LOW LEVEL) ensures the heater will not exceed temperatures which can cause serious damage to your unit. A single temperature sensor, located on the heater coils in the circulator, monitors both conditions. A High Temperature/Low Liquid Level fault occurs when the temperature of the sensor exceeds the set temperature limit.

In the event of a fault, the unit will shut down and a FAULT LED will illuminate. The cause of the fault must be identified and corrected before the unit can be restarted.

To set the safety, locate the HIGH TEMP/LOW LEVEL SAFETY adjustment dial in back of the pump box. Turn the dial fully clockwise.

Start the unit. Adjust the setpoint for a few degrees higher than the highest desired fluid temperature and allow the circulator to stabilize at the temperature setpoint. Turn the HIGH TEMP/LOW LEVEL SAFETY dial counterclockwise until you hear a click and the unit shuts down. The red FAULT LED on the temperature controller will light to indicate a fault has occurred.

Cool the circulator and then, without moving the adjustment dial, turn the unit off then back on.

Maintenance & Troubleshooting

Cleaning

Allow sufficient for the fluid to cool to room temperature before handling.

Turn the unit off before cleaning.

Routine cleaning can be achieved by simply sponging down the seamless stainless steel tank with a mild soapy solution.

Do not use steel wool; its abrasiveness will lead to rusting.

Dry the circulator using a soft cloth.

For proper operation, the unit needs to pull substantial amounts of air through a condenser. A build up of dust or debris on the fins of the condenser will lead to a loss of cooling capacity.

Periodic vacuuming of the condenser is necessary. The frequency of cleaning depends on the operating environment. After initial installation we recommend the wrapper be removed and a monthly visual inspection of the condenser be made. After several months the frequency of cleaning will be established.

Algae

To restrict the growth of algae in the circulator, we recommend the circulator cover be kept in place and that all circulation lines be opaque. This will eliminate the entrance of light required for the growth of most common algae.

We recommend the use of Chloramine-T, 1 gram per 3.5 liters.

Checklist

Unit will not start

Make sure the voltage of the power source meets the specified voltage, ±10%. Refer to the serial number label on the rear of the unit to identify the specific electrical requirements of your unit.

Check the High Temperature/Low Liquid Level Safety. If the FAULT light is on, make sure the fluid level in the circulator is between the marks in the baffle and the HIGH TEMP/LOW LEVEL SAFETY setting is greater than the fluid temperature. Turn the unit's I/O switch off then back on to reset the safety.

Loss of cooling capacity
Be sure the cooling capacity of the unit has not been exceeded if circulating to an external system.

When the unit is shut off, wait approximately five minutes before restarting. This allows time for the refrigeration pressures to equalize. If the pressures are not allowed to equalize, the compressor will short-cycle (clicking sound) and no cooling will occur.

Proper ventilation is required for heat removal. Make sure ventilation through the front and rear panels is not impeded and the panels are free of dust and debris.

Ice build up on the cooling coils can act as insulation and lower the cooling capacity. Raise the temperature of the circulator to de-ice the cooling coil and increase the concentration of non-freezing fluid.

Check controller PID values, see below.

No external circulation
Make sure the stainless steel plugs on the PUMP INLET and PUMP OUTLET have been removed.

Check for obstructions, kinks, or leaks in the circulation tubing.

Circulation will cease when the pump head has been exceeded.

PID Values

The PID values can be verified in the controller's Setup Loop. The factory preset PID values are:

Digital	P = 1.2	I = 0.20	D = 0.05
Advanced Digital	P = 1.2	I = 0.20	D = 0.05
Programmable	P = 1.2	I = 0.20	D = 0.05

Appendix Fluids

Water Quality Standards and Recommendations

	Permissible (PPM)	Desirable (PPM)
Microbiologicals		
(algae, bacteria, fungi)	0	0
Inorganic Chemicals		
Calcium	<25	<0.6
Chloride	<25	<10
Magnesium	<12	<0.1
Sulfate	<25	<1
Total Hardness	<17	<0.05

Unfavorably high total ionized solids (TIS) can accelerate the rate of galvanic corrosion. These contaminants can function as electrolytes which increase the potential for galvanic cell corrosion and lead to localized corrosion such as pitting which can be observed at the studs and on the outside surface of cooling coils. Eventually, the pitting will become so extensive that the coil will leak refrigerant into the water reservoir.

For example, tap water in the U.S. averages 171 ppm (of NaCl). The recommended level for use in a water system is between 0.5 to 5.0 ppm (of NaCl).

Recommendation: Initially fill the tank with distilled/deionized water. Do not use untreated tap water as the total ionized solids level may be too high.

Maintain this water quality at a resistivity of between 1 to 10 MOhmcm (compensated to 25°C) by using a purification system. Although the initial fill may be as high as 18 MOhmcm (compensated to 25°C), the desired level for long time usage is 1 to 3 MOhmcm (compensated to 25°C).

The above two recommendations will reduce the electrolytic potential of the water and prevent or reduce the galvanic corrosion observed.