## Cautions/Warnings

1. Power (ALWAYS check the Chiller Parameter tag and verify operational voltage before plugging in chiller)
    a. Only connect North Slope Chillers to a properly grounded circuit
    b. Never connect your North Slope Chiller to voltage that is outside the acceptable voltage range. Connecting your chiller to any voltage outside of these ranges will damage the compressor.
        i. 110V model will operate on voltages between 100 ~ 130V
        ii. 230V model will operate on voltages between 200 ~ 250V
    c. Only use power sources that are 60Hz, running the chiller at 50Hz will void the warranty and will damage the compressor
2. Never run the pump dry, only turn on chiller after the fluid reservoir has been filled. Running the chiller without fluid will permanently damage the pump and void the warranty
3. This chiller is air cooled and must have good ventilation. For proper function there must be a minimum of 1 foot clearance on both sides and 2 foot clearance at the back of the chiller

## Specification sheet

| NSC0250-FROST | |
|---|---|
| Voltage | Single Phase, 60hz, 110VAC |
| Current | 4.5 – 6.5 Amps |
| Compressor Power | .93HP (.68kW) |
| Refrigeration Capacity | 3000 BTU/hr (878 kW) @90F ambient and 45F fluid |
| Refrigerant | R-410a |
| Refrigerant Charge | .77 lbs |
| Precision | ±0.5°F (0.3°C) |
| Metering Device | Capillary |
| Protection | Overcurrent protection for compressor, flow alarm and over temperature alarm |
| Pump Power | 0.04HP (0.03kW) |
| Tank Capacity | 2 Gallons (8 Liters) |
| Inlet and Outlet | ¾” Nylon barbed fitting |
| Maximum Lift | 40 feet (12 meters) |
| Maximum flow | 3.5 GPM (13 L/min) |
| Dry Weight | 64lbs (29kg) |
| Dimensions | 21.8” x 11.125” x 21.5” (L x W x H) |

## Chiller Performance

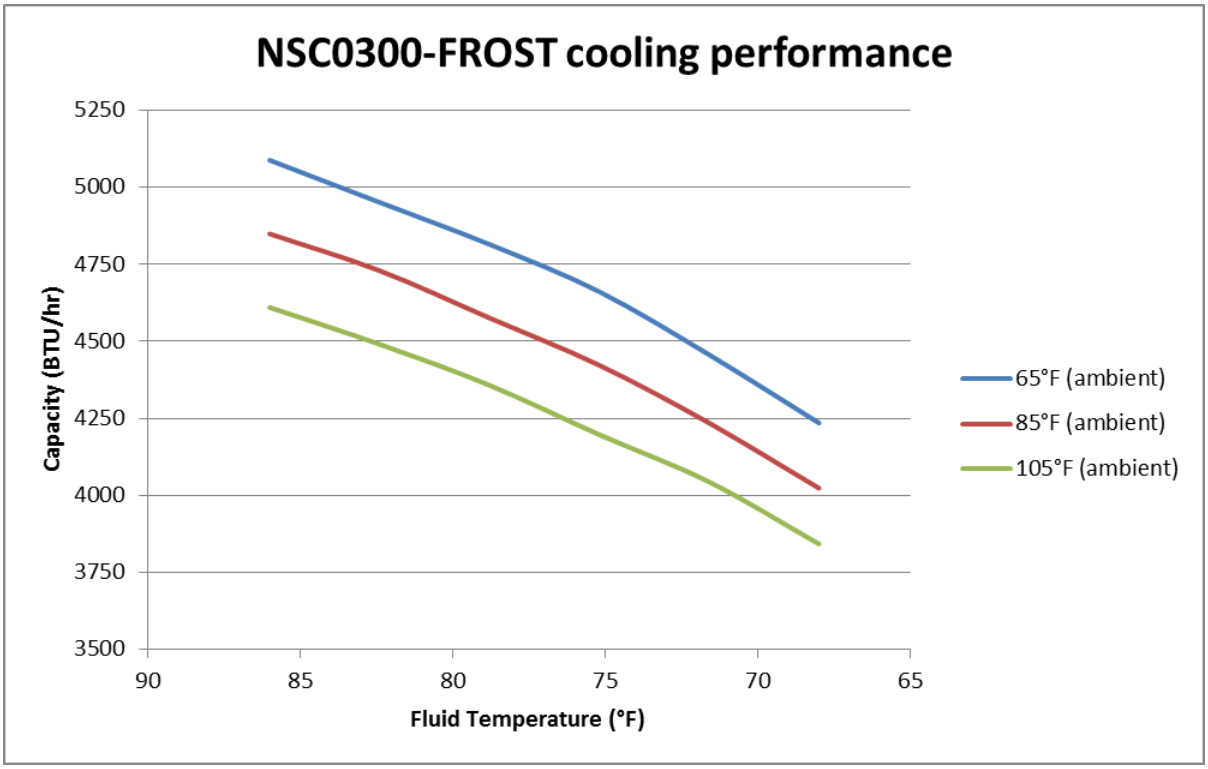

## Chiller overview

**FRONT**

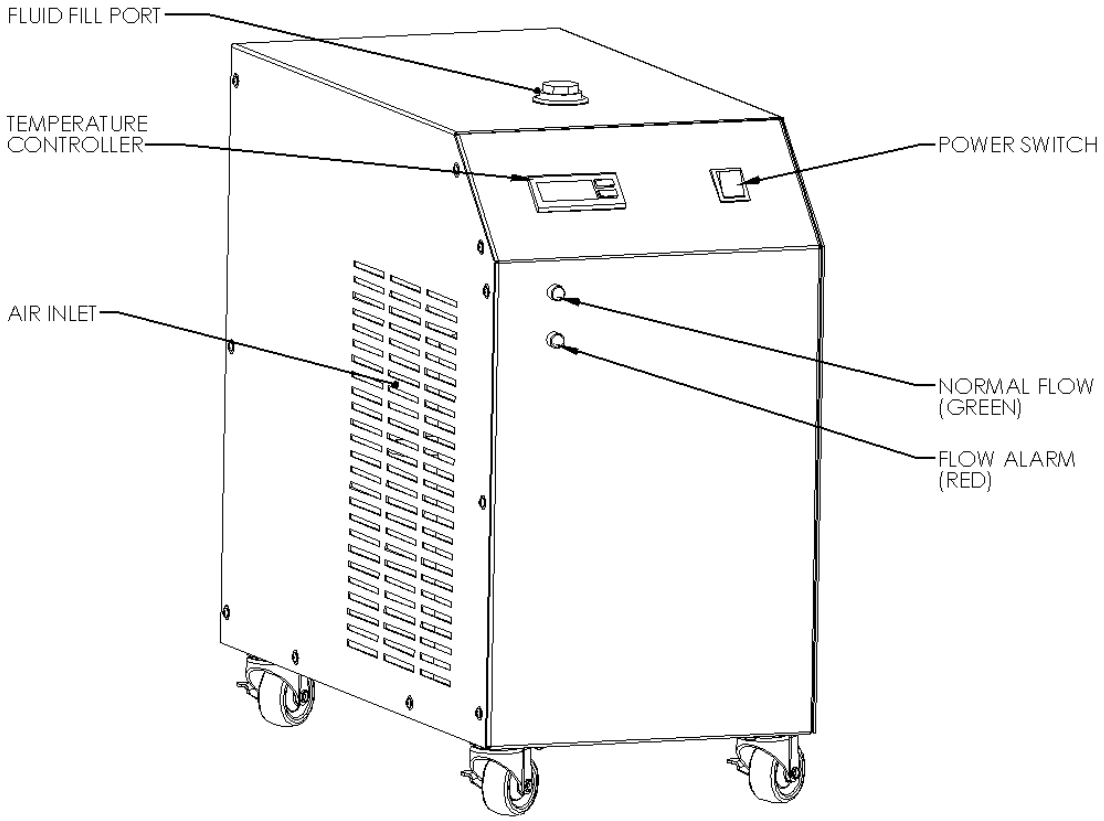


**BACK**

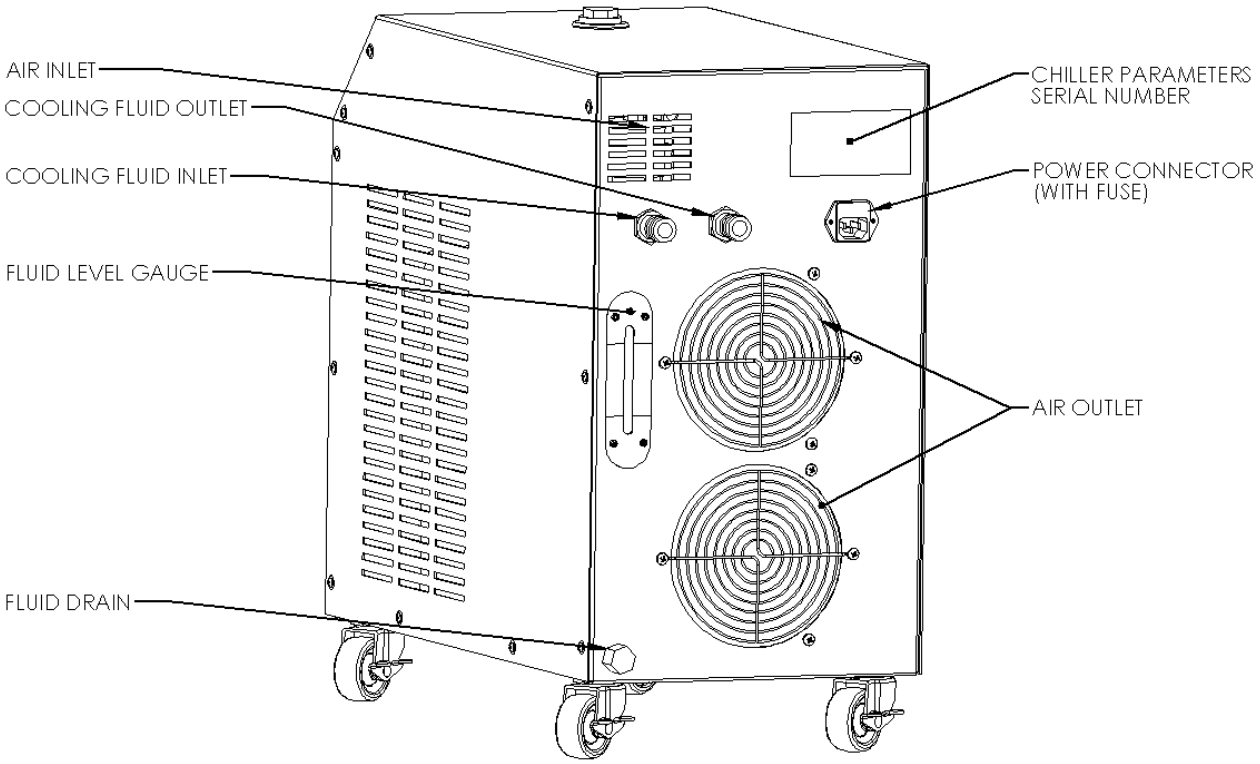

## Installation

1. Open package to check for damage and to verify that all components are there
2. Fill the reservoir
3. Connect inlet and outlet hoses
4. Plug in Power and turn on power switch
5. Verify water level in tank
6. Adjust temperature controller

# Temperature control settings

## Temperature Control Panel

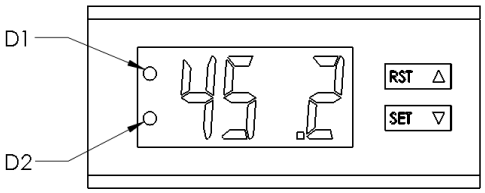


### LED Indicator Lights

| | |
|---|---|
| **D1** | ON: System is running in intelligent control mode<br>OFF: System is running in temperature control mode<br>FLASHING: Controller is in parameter setting mode or displaying room temperature |
| **D2** | ON: Indicates that the compressor is running and the chiller is actively chilling fluid<br>OFF: Compressor is off (maintaining temperature)<br>FLASHING: Chiller is in energy-saving state |

### Alarm codes

| Error Code | Problem |
|---|---|
| E1 | High ambient (room) temperature |
| E2 | High water temperature |
| E3 | Low water temperature |
| E4 | Ambient (room) temperature sensor failure |
| E5 | Water temperature sensor failure |

When alarm occurs the alarm code and fluid temperature will alternate on the display

The alarm sound can be suppressed by pressing any button, but the code will remain until the alarm condition is fixed.

### Check ambient temperature

1. Press ▽ button to display ambient temperature
2. D1 indicator light will flash while ambient temperature is being displayed. The display will return to normal after 6 seconds.

### Adjust temperature (Constant Temperature Mode)

Constant temperature mode is the default control mode. When this mode is selected

1. Press SET to display the current target temperature setting
2. Press △ or ▽ to adjust the target temperature setting
3. Press Rst to save and exit parameters and return to temperature display. If no buttons are pressed for 20 seconds the controller will automatically return to the temperature display without saving changes.

### Adjust temperature (Intelligent Temperature Mode)

1. Press SET to display the current target temperature setting
2. Press △ or ▽ to adjust the target temperature setting
3. Press Rst to save and exit parameters and return to temperature display. If no buttons are pressed for 20 seconds the controller will automatically return to the temperature display without saving changes.

## Advanced settings adjustment

1. Press and hold △ button then press SET and hold for 5 seconds until "0" is displayed
2. Press △ button to switch from 0 to 8 (default password)
3. Press SET to press enter after setting the correct password. F0 will be displayed.
4. Press △ or ▽ to select the parameter to be changed
5. Press SET when a parameter is selected to see the current value and make changes
6. Press △ or ▽ to change the parameter to the desired value
7. Press Rst to save and exit parameters. If no button is pressed for 20 seconds the screen will return to the default screen and exit without saving parameter changes.

## Parameter List

| Parameter | Description | Range | Factory Default | Notes |
|---|---|---|---|---|
| F0 | Temperature Setting | F8 – F9 | 45°F | Constant Temperature |
| F1 | Temperature Difference setting | -27 - +9 | -3.6°F | Intelligent Mode (ambient tracking) |
| F2 | Cooling differential | 0.2 – 5.4 | 0.5 | |
| F3 | Control Method | 0 – 1 | 0 | Constant Temperature (0) or Intelligent Mode (1) |
| F4 | High water temperature alarm | 2°F - 36°F | 18°F | |
| F5 | Low water temperature alarm | 2°F - 36°F | 27°F | |
| F6 | High ambient (room) temperature alarm | 104°F - 122°F | 113°F | |
| F7 | Password | 0 – 99 | 8 | |
| F8 | Max target temp limit | F0 - 104°F | 86°F | |
| F9 | Min target temp limit | 33.8°F - F0 | 40°F | ⚠**WARNING: Do not run chiller lower than 40°F. This will damage the chiller and void your warranty.** |

**Constant Temperature Mode**

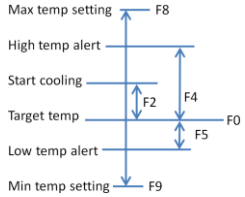


**Intelligent Mode**

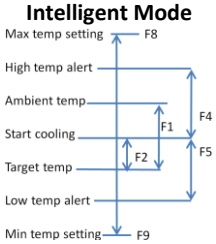


## Flow Alarm

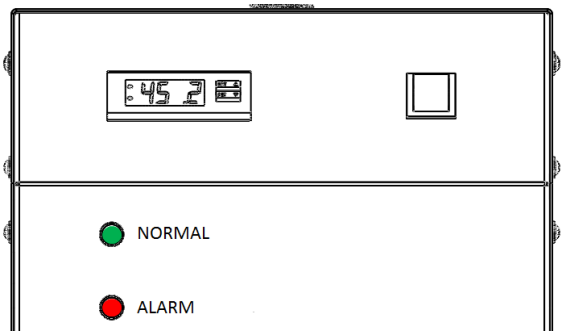


| Condition | Normal Flow Indicator | Flow Alarm Indicator | Buzzer |
|---|---|---|---|
| Circulating Pump works properly | ● | ⊗ | ⊗ |
| Blockage in cooling water circulation line | ⊗ | ● | 🔊 |
| Low water level | ⊗ | ● | 🔊 |
| Circulation pump failure | ⊗ | ● | 🔊 |

STANDARD PRODUCT WARRANTY

## 1. LIMITED WARRANTY POLICY

Manufacturer warrants Ready to Ship products sold as "new" to be free from defects in material and workmanship under normal and proper use and servicing for a period of the shorter of one (1) year from the date of purchase by a retail customer. MANUFACTURER MAKES NO OTHER WARRANTY OR REPRESENTATION OF ANY KIND, EXPRESSED OR IMPLIED, IN FACT OR IN LAW, INCLUDING WITHOUT LIMITATION ANY WARRANTY OF MERCHANTABILITY OR FITNESS FOR A PARTICULAR PURPOSE OR USE OTHER THAN THE LIMITED WARRANTY SET FORTH ABOVE.

## 2. EXPRESS DISCLAIMER

Manufacturer MAKES NO WARRANTIES OR REPRESENTATIONS AS TO THE Products, EXCEPT AS SET FORTH ABOVE. ALL IMPLIED WARRANTIES AND CONDITIONS, INCLUDING BUT NOT LIMITED TO IMPLIED WARRANTIES OF MERCHANTABILITY, FITNESS FOR A PARTICULAR PURPOSE AND NONINFRINGEMENT, ARE HEREBY DISCLAIMED.

## 3. WARRANTY EXCLUSIONS

Exclusions from warranty consideration include, but are not limited to: normal wear and tear; abuse, misuse, or non-standard application; act of nature; lack of proper maintenance; unauthorized repair; unauthorized product modification. The user of the Manufacturer's Products is expected to follow all operating instructions and make periodic checks and inspections to ensure the physical condition and performance of the Product(s). Neither Manufacturer, nor its representatives, assumes any responsibility for results of the use of the Products beyond the operation and performance of the Products themselves. Only the Manufacturer is authorized to make any warranty or representation and the customer may not rely on any other warranty or representation. All implied warranties are hereby disclaimed.

## 4. RETURNS

a. When any of Manufacturer's Products have been authorized to return for any inspection, or replacement, it must be returned as specified in the Return Merchandise Authorization Form.

b. A Manufacturer-issued Returned Material Authorization (RMA) number authorizing a product return must be acquired prior to sending any return. In addition, documentation of model, product serial number, dealer invoice number, dated proof of resale, and description of failure shall accompany all returns.

c. All returns must come freight prepaid and in its original container, or in a manner conducive to proper shipping and handling procedures. Product(s) replaced, or shipped in accordance with manufacturers' warranty policy for doing so will be returned freight prepaid.

d. Manufacturer reserves the right to postpone, delay, or refuse warranty claim consideration for either unauthorized returns or returns made by dealers or distributors whose open and active accounts are past due or delinquent. The dealer or distributor agrees that no warranties or other guarantees on any products shall be made in excess of those made by Manufacturer. This agreement excludes Manufacturer or its representatives from all liability not covered in this Warranty.

## 5. REFUSAL OF WARRANTY CLAIM

Manufacturer reserves the right to postpone, delay, or refuse warranty claim consideration for either unauthorized returns or returns made by a Distributor whose open and active accounts are past due or delinquent with respect this Agreement.