ENVIRONMENTAL EXPRESS
oakton

Instruction Manual

CONDUCTIVITY METER

EC250
EC260

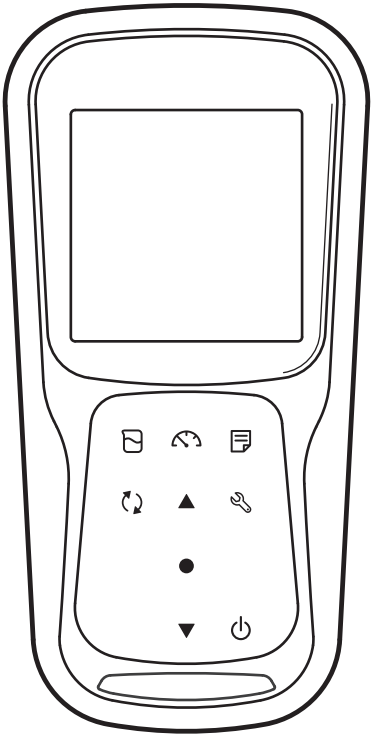

• Preface

This manual describes the operation of the following instrument.

Brand:	OAKTON
Series name:	OAKTON 200 series Handheld Water Quality Meter
Model:	EC250, EC260
Model description:	Conductivity Meter

Be sure to read this manual before using the product to ensure proper and safe operation of the product. Also, safely store the manual so it is readily available whenever necessary. Product specifications and appearance, as well as the contents of this manual are subject to change without notice.

• Warranty and responsibility

Oakton Instruments. warrants that the product shall be free from defects in material and workmanship and agrees to repair or replace free of charge, at option of Oakton Instruments., any malfunctioned or damaged product attributable to responsibility of Oakton Instruments. for a period of Three (3) years from the delivery unless otherwise agreed in a written statement. In any one of the following cases, none of the warranties set forth herein shall be extended:

- Any malfunction or damage attributable to improper operation
- Any malfunction attributable to repair or modification by any person not authorized by Oakton Instruments.
- Any malfunction or damage attributable to the use in an environment not specified in this manual
- Any malfunction or damage attributable to violation of the instructions in this manual or operations in the manner not specified in this manual
- Any malfunction or damage attributable to any cause or causes beyond the reasonable control of Oakton Instruments. such as natural disasters
- Any deterioration in appearance attributable to corrosion, rust, and so on
- Replacement of consumables

Oakton Instruments. SHALL NOT BE LIABLE FOR ANY DAMAGES RESULTING FROM ANY MALFUNCTIONS OF THE PRODUCT, ANY ERASURE OF DATA, OR ANY OTHER USES OF THE PRODUCT.

• Trademarks

- Microsoft, Windows, Windows Vista are registered trademarks or trademarks of Microsoft Corporation in the United States and other countries.

Other company names and brand names are either registered trademarks or trademarks of the respective companies. (R), (TM) symbols may be omitted in this manual.

CODE:M003809-3200828206-GZ0000581079
November,2019 © 2019 Oakton Instruments.

Regulations

• Regulations

• EU regulations

• Conformable standards

This equipment conforms to the following standards:

EMC:	EN61326-1 Class B, Basic electromagnetic environment
RoHS:	EN50581 9. Monitoring and control instruments

Warning: This product is not intended for use in industrial environments. In an industrial environment, electromagnetic environmental effects may cause the incorrect performance of the product in which case the user may be required to take adequate measures.

• Information on disposal of electrical and electronic equipment and disposal of batteries and accumulators

The crossed out wheeled bin symbol with underbar shown on the product or accompanying documents indicates the product requires appropriate treatment, collection and recycle for waste electrical and electronic equipment (WEEE) under the Directive 2012/19/EU, and/or waste batteries and accumulators under the Directive 2006/66/EC in the European Union. The symbol might be put with one of the chemical symbols below. In this case, it satisfies the requirements of the Directive 2006/66/EC for the object chemical. This product should not be disposed of unsorted household waste. Your correct disposal of WEEE, waste batteries and accumulators will contribute to reducing wasteful consumption of natural resources, and protecting human health and the environment from potential negative effects caused by hazardous substance in products.
Contact your supplier for information on applicable disposal methods.

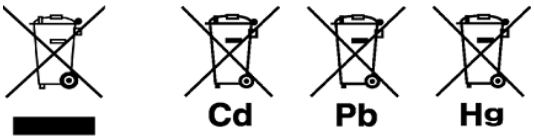

Regulations

• Authorised representative in EU

Cole-Parmer UK
9 Orion Court, Ambuscade Road
Colmworth Business Park
St Neots
Cambridgeshire
PE19 8YX, United Kingdom
Phone: +44-(0)1480-272279
Fax: +44-(0)1480-212111

• FCC rules

FCC Compliance Statement

This device complies with part 15 of the FCC Rules. Operation is subject to the following two conditions: (1) This device may not cause harmful interference, and (2) this device must accept any interference received, including interference that may cause undesired operation.

Responsible Party for FCC matter

Oakton Instruments
625 East Bunker Court,
Vernon Hills, IL, 60061, USA
Tel: 1-888-462-5866

Note

This equipment has been tested and found to comply with the limits for a Class A digital device, pursuant to part 15 of the FCC Rules. These limits are designed to provide reasonable protection against harmful interference when the equipment is operated in a commercial environment. This equipment generates, uses, and can radiate radio frequency energy and, if not installed and used in accordance with the instruction manual, may cause harmful interference to radio communications. Operation of this equipment in a residential area is likely to cause harmful interference in which case the user will be required to correct the interference at his own expense.

Any changes or modifications not expressly approved by the party responsible for compliance could void the user's authority to operate the equipment.

• For Your Safety

• Hazard classification and warning symbols

Warning messages are described in the following manner. Read the messages and follow the instructions carefully.

• Hazard classification

⚠DANGER	This indicates an imminently hazardous situation which, if not avoided, will result in death or serious injury. This is to be limited to the most extreme situations.
⚠WARNING	This indicates a potentially hazardous situation which, if not avoided, could result in death or serious injury.
⚠CAUTION	This indicates a potentially hazardous situation which, if not avoided, may result in minor or moderate injury. It may also be used to alert against unsafe practices.

• Warning symbols

❗	Description of what should be done, or what should be followed.
⃠	Description of what should never be done, or what is prohibited.

• Safety precautions

This section provides precautions for using the product safely and correctly and to prevent injury and damage. The terms of DANGER, WARNING, and CAUTION indicate the degree of immanency and hazardous situation. Read the precautions carefully as it contains important safety messages.

• Instrument and electrode

⚠ WARNING	
⊘	Do not disassemble or modify the instrument. Otherwise, it may heat up or be ignited resulting in a fire or an accident.

⚠ CAUTION	
❗	**Broken glass** Broken glass may cause injury. The outer tube and tip of some electrodes are made of glass. Handle them with care.
⊘	Do not use the phono jack under wet or humid conditions. Otherwise, it may cause a fire, electric shock, or breakage.

• **Battery**

⚠ WARNING	
❗	Keep batteries out of reach of children. If someone accidentally swallows a battery, consult a doctor immediately.
❗	If alkaline fluid from a battery gets into the eyes, do not rub the eyes, rinse with clean water immediately and then consult a doctor. Contact with alkaline fluid could cause blindness.
⃠	Do not put batteries in a fire, expose to heat, disassemble or remodel. Doing so can case fluid leakage, overheating or explosion.

• Product Handling Information

• Operational precautions (instrument)

- Only use the product including accessories for their intended purpose.
- Do not drop or physically impact the instrument.
- The instrument is made of solvent-resistant materials but that does not mean it is resistant to all chemicals. Do not expose the instrument in strong acid or alkali solution, or wipe with such solution.
- If the instrument is dropped into water or gets wet, wipe it using soft cloth. Do not heat to dry it.
- The instrument has a dust-proof and waterproof structure i.e., the instrument does not malfunction even when immersed in water of 1 m depth for 30 minutes. This does guarantee non-destructive, trouble-free, dust-proof, and waterproof performance in all situations.
- When replacing the batteries or when a serial cable connected, the instrument does not have the dust-proof and waterproof performance. The dust-proof and waterproof performance is maintained only when the covers are attached correctly.
- After replacing the batteries or removing the serial cable connected, make sure that the waterproof gasket attached to the cover is not deformed or discolored, or has foreign matter adhering to it. If the waterproof gasket is deformed, discolored or has foreign matter adhering to it, dust could get inside, water leaks could occur that could lead to instrument malfunction.
- To disconnect an electrode or serial cable, hold the connector and pull it off. If you pull at the cable, it may cause breakage.
- The phono jack communication between the instrument and a personal computer (referred to as PC in the rest of this document) may fail because of environmental conditions, such as electromagnetic noise.
- Do not replace the batteries in a dusty place or with wet hands. Dust or moisture could get inside the instrument, possibly causing instrument malfunction.
- Do not use an object with a sharp end to press the keys.
- If the power supply is interrupted while measurement data is being saved in the instrument, the data could be corrupted.
- A Ni–MH rechargeable battery can be used in this instrument.

• Operational precautions (battery)

- Do not short circuit a battery.
- Position the + and – side of the battery correctly.
- When the battery has depleted or the instrument will not be used for a long time, remove the batteries.
- Of the specified battery types, make sure to use two batteries of the same type.
- Do not use a new battery together with a used battery.
- Do not use a fully charged nickel-metal hydride battery together with a partially charged battery.
- Do not attempt to charge a non-rechargeable battery.

Product Handling Information

- **Environmental conditions for use and storage**

  - Temperature: 0 °C to 45 °C
  - Humidity: under 80% relative humidity and free from condensation

- **Avoid the following conditions:**

  - Strong vibration
  - Direct sunlight
  - Corrosive gas environment
  - Locations close to an air-conditioner
  - Direct wind

- **Transportation**

  When transporting the instrument, repackage it in the original package box. Otherwise, it may cause instrument damage.

- **Disposal**

  - Standard solution used for the calibration must be under neutralized before the disposal.
  - When disposing of the product, follow the related laws and regulations of your country for disposal of the product.

Contents

■ Product Overview 1
● Package Content 1
● Key Features 2
● Product components 3
■ Basic operations 7
● Mode and measurement 9
■ Calibration 11
● Conductivity Calibration 11
● TDS calibration 14
● Salinity calibration 15
● Temperature Calibration 17
■ Data 19
● Data capture and storage 19
● Data transfer 20
■ Setup 21
● P1 COND setup 21
● P2 TDS setup 28
● P3 SAL setup 31
● P4 Data setup 35
● P5 General setup 39
● P6 CLK setup 44
■ Maintenance and storage 47
● Maintenance and storage of the instrument 47
● Maintenance and storage of the conductivity electrode 48
■ Error messages and trouble shooting 49
■ Appendix 53

● Appendix 1 53
● Appendix 2 54
● Appendix 3 58

■ Product Overview

This section describes the package content, key features and product components of OAKTON 200 series Handheld meters.

● Package Content

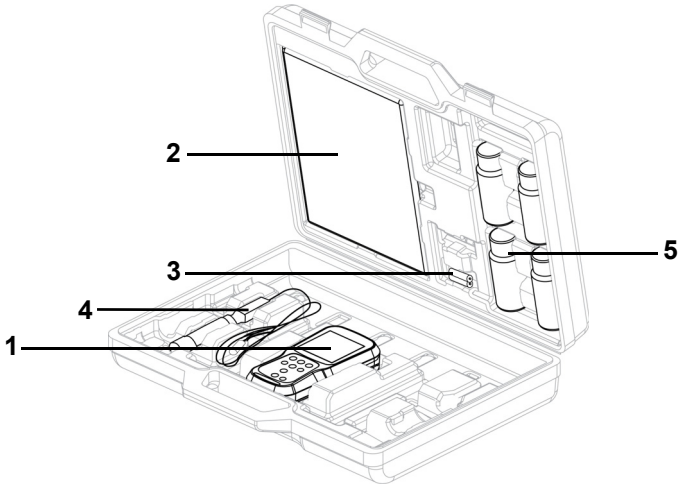

After opening the carry case, remove the meter and check for damage on the instrument and confirm that the standard accessories all exist. If damage or defects are found on the product, contact your dealer.
OAKTON 200 series Handheld meters and meter kit include the following items:

S.NO.	Name
1	Instrument
2	Instruction manual
3	2 AA batteries
4	Electrode (Electrode kit only)
5	Calibrating solutions

● Key Features

- IP67 water ingress, dust-proof, shock-resistant, anti-slip meter housing.
- Large monochrome LCD (50 x 50 mm) with white LED back lighting.
- Built-in electrode holder (up to 2 electrodes).
- Foldable meter stand.
- Simple user interface and single parameter display.
- 500 (for EC250) / 1000 (for EC260) data memory.
- Automatic Temperature Compensation (ATC) with temperature calibration.
- Adjustable auto shut-off time (1 to 30 minutes).
- Auto-hold / Auto stable / Real-time measurement modes with stability indicators.
- Powered by 2 x AA batteries.
- Real-time clock (only for EC260).
- PC (standard USB) / Printer (25 pin serial) connection via 2.5 mm diameter phono jack.

● Product components

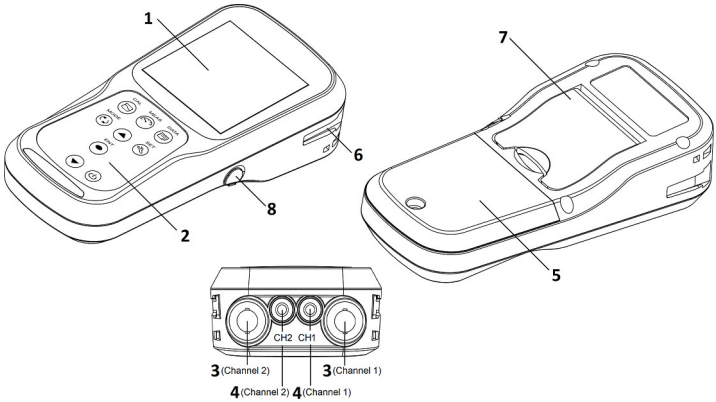

No	Name	Function
1	Monochrome LCD	Displays the measured value
2	Operation keys	Used for instrument operation
3	Electrode connector	Connect to the BNC connector of the electrode
4	Temperature connector (T)	Connect to the temperature sensor of the electrode
5	Battery cover	Open/close to insert/remove batteries
6	Electrode holder	Hold the electrode to carry with the instrument
7	Meter stand	Open stand to place the meter at an inclined position on a flat surface
8	Serial connector	Connects to the PC or printer with the appropriate cable

Display

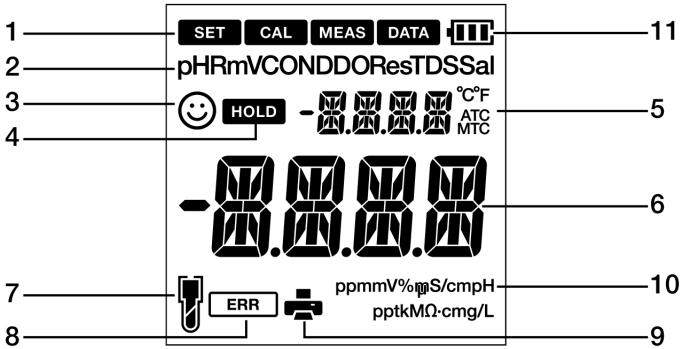

No	Name	Function
1	Status Icon	Displays the current operation mode (Setup, Calibration, Measurement and Data mode)
2	Parameters	Displays the measured parameters like COND, Res, TDS and Sal
3	☺	Stability indicator shows value is stable for the documentation in auto-stable and auto-hold modes
4	HOLD	Appears when the measured value display is stable and fixed in auto-hold mode
5	Temperature display area	Displays the measured temperature
6	Measured value, set item display area	Displays the measured value and the set value
7		Indicates electrode sensitivity level
8	ERR	Indicate error situations
9		Indicates data being transfered to the printer or computer
10	ppmmV%µmS/cmpH pptkMΩ·cmg/L	Displays the unit for the measurement parameter
11		Displays the battery level

- **Battery level display**

	100% battery life
	50% battery life
	20% battery life
	Batteries are weak and need replacement. “BATT LOW” on page 49 is displayed and operation is disabled

- **Electrode sensitivity level**

	Electrode sensitivity 95% (excellent)
	Electrode sensitivity between 85% to 95% (very good)
	Electrode sensitivity between 80% to 85% (good). Refer “SLPE ERR” on page 49 to solve this

● Keypad operation

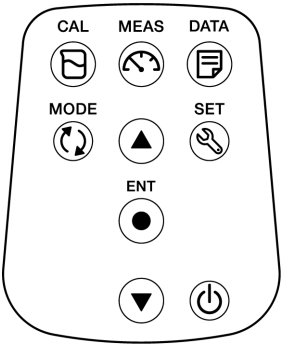

Key	Name	Function
	CAL key	Switches from the measurement mode to the calibration mode. Starts calibration in the calibration mode.
	MEAS key	Switches the operation mode to the measurement mode. Releases the fixed measurement value mode in the auto hold mode and begins a new measurement.
	DATA key	Switches from the measurement mode to the data mode.
	MODE key	In the measurement mode, changes measurement parameters.
	SET key	Switches from the measurement mode to the setup mode.
	ENTER key	Determines the selection or setup. Saves data in the measurement mode and calibration mode.
	UP key	In the setup mode, navigates between setups. Selects preferred option in some setup screens. Increases or decreases selected digit when entering numbers.
	DOWN key	
	POWER key	Powers ON/OFF the instrument.

■ Basic operations

This section describes function and basic operation method of each part of OAKTON 200 series Handheld meters.

● Turning on the instrument

Inserting the batteries

This instrument is operated by batteries. You can use AA alkaline batteries or AA Ni- MH chargeable batteries. Perform the following procedure to insert batteries in the instrument.

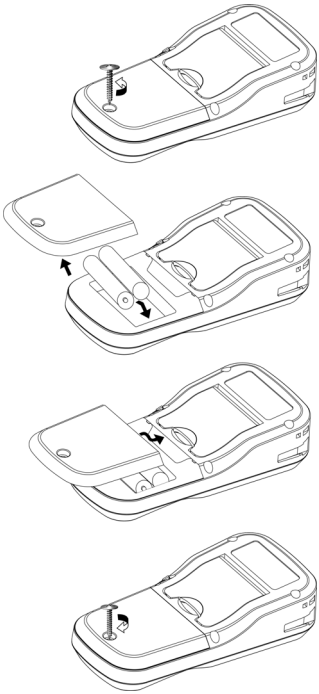

1. Unscrew the battery cover on the back of the instrument counter-clock wise to unlock the battery cover.

2. Remove the battery cover and set the batteries inside.

3. Replace battery cover.

4. Screw the battery cover on the back of the instrument clockwise to lock the battery cover.

Note

- Do not replace the batteries in a dusty place or with wet hands. Dust or moisture could get inside the instrument and possibly cause an instrument malfunction.
- Do not short-circuit a battery.
- Note polarity as shown in the battery compartment.
- When the battery has depleted or the instrument will not be used for a long time, remove the batteries.
- Of the specified battery types, make sure to use two batteries of the same type.
- Do not use a new battery together with an used battery.

● Connecting an electrode

To perform calibration / measurement, it is necessary to use the appropriate electrode for measurement parameter. Use the following procedure to correctly connect the electrode to the instrument.

1. Insert the electrode connector by fitting its groove with the connector pin of the instrument.
2. Turn the electrode connector clockwise by following the grooves.
3. Slide the connector cover on the connector.
4. When using a combination electrode equipped with a temperature sensor, insert the temperature jack (T) to the ATC socket on the meter.

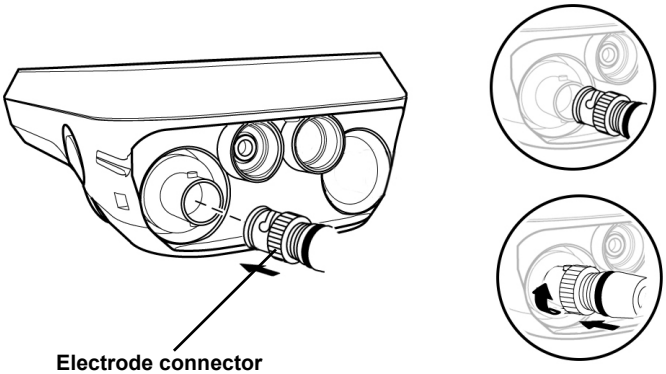

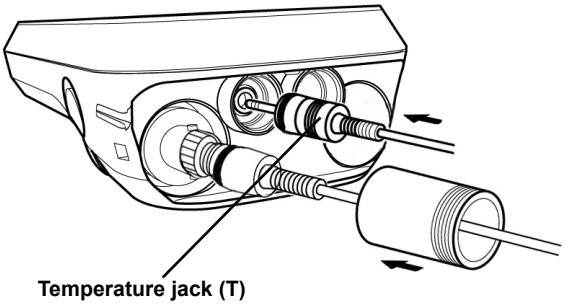

Mode and measurement

Changing the operation mode

You can change the operation mode to four available modes depending on the purpose of use. The status icon indicates the current mode.

Status icons — SET CAL MEAS DATA

Icon	Name	Function
SET	Setup mode	Perform various custom.
CAL	Calibration mode	Performs calibration.
MEAS	Measurement mode	Performs measurement.
DATA	Data mode	Performs data setup. Displays the saved data.

You can change the operation mode using the corresponding key:

- **Measurement mode:** Press the key to change to the measurement mode.
- **Calibration mode:** In the measurement mode, press the key to change to the calibration mode.
- **Data mode:** In the measurement mode, press the key to change to the data mode.
- **Setup mode:** In the measurement mode, press the key to change to the setup mode.

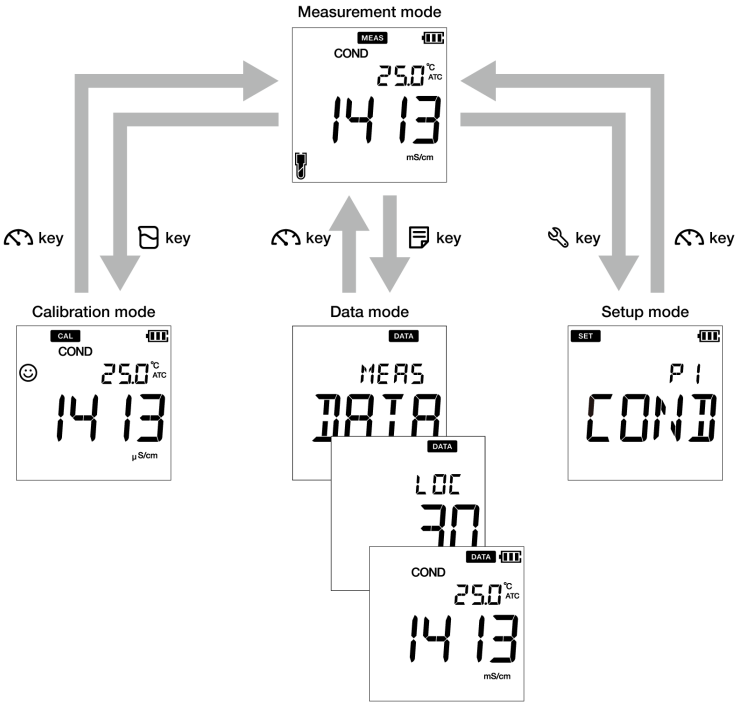

● Changing the measurement parameter

This instrument measures multiple parameters. For measurement, an electrode corresponding to the measurement parameter is required. In the measurement mode, the measurement parameter can be changed by pressing the key.

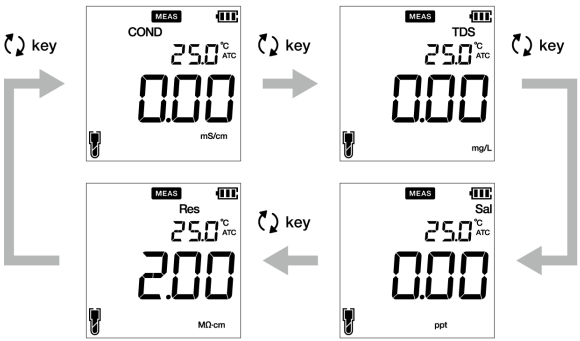

■ Calibration

This section describes the basic calibration method of each measurement parameter using OAKTON 200 series Handheld meters and conductivity electrode.

● Conductivity Calibration

Calibration is necessary for accurate electrical conductivity measurement. To perform conductivity calibration, follow the procedure detailed below:

Prerequisites

- Clean the conductivity electrode with DI (deionized) water and wipe it with tissue paper.
- Switch on the EC meter and plug in the conductivity electrode.
- Prepare standard solution required for calibration.
- Press the key to keep the EC meter in **COND** mode.
- Dip the conductivity electrode in the standard solution till the hole at the upper part of the electrode is immersed.

Note

- Salinity, TDS, and resistivity of a sample solution are calculated from the measured value of conductivity.
- In conductivity calibration mode, the default calibration method is Auto calibration. If you like to change it to manual calibration method, refer “P1.3 calibration mode setup” on page 24.

Tip

- For second or multiple point calibration, clean the conductivity electrode with DI water and follow the same procedure.
- If you are performing multiple point calibration, calibrate to the lowest conductivity first and then move to increasing conductivity values. This minimizes cross contamination.
- To abort an ongoing calibration process at any point of time, press the key.

Calibration

Auto calibration

1. After placing the conductivity electrode in the standard solution, press the key.
2. Meter displays “Auto cal” as per set calibration method and starts measuring various calibration values with a blinking on screen.
3. Wait for the to stabilize (stable calibration reading).
4. Press the **ENT** key to confirm and save calibration data.
5. Meter displays **DONE** indicating end of the conductivity calibration procedure.
6. Repeat for other calibration points as required.
7. You can calibrate at one point for each range

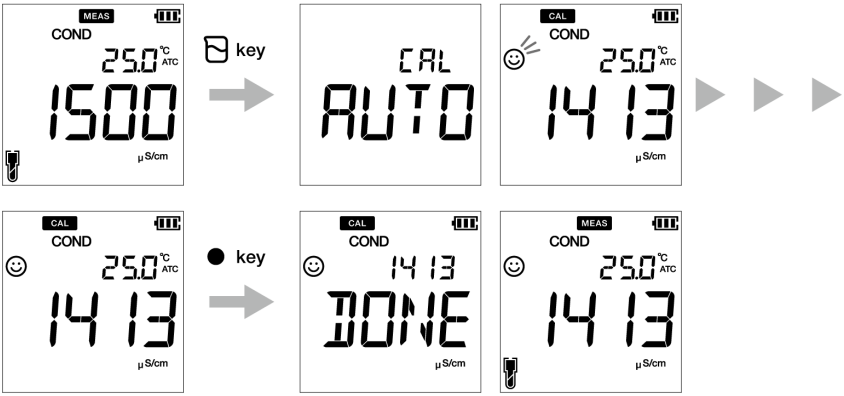

Note

If you want to know previous calibrated values, press the key when you are in the **CAL** mode.The display scrolls through the calibrated values.

Manual calibration

1. After placing the conductivity electrode in the standard solution, press the key.
2. Meter displays “Manual cal” as per set calibration method and starts measuring various calibration values with a blinking ☺ on screen.
3. Wait for the ☺ to stabilize (stable calibration reading).
4. Use the ▲▼ keys to enter the electrical conductivity value of the standard solution used for calibration.
5. Press the **ENT** ● key to confirm and save calibration data.
6. Meter displays **DONE** indicating end of the conductivity calibration procedure.
7. Repeat for other calibration points as required.
8. You can calibrate at one point for each range.

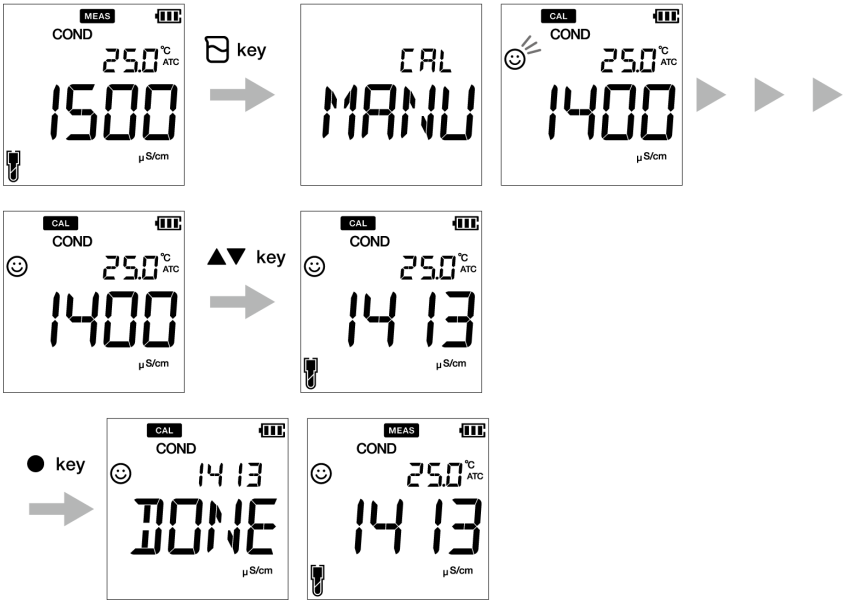

● TDS calibration

TDS (Total dissolved solids) is calculated from the measured conductivity value. So no TDS calibration is required and once conductivity mode is calibrated, TDS values will be recalibrated accordingly.
Set the required TDS curve in OAKTON 200 series Handheld meters. Available TDS curves are;

- **LINR** (Linear factor with adjustable factor from 0.4 to 1.0)
- **442** (Myron L 442 non-linear curve)
- **EN** (European environmental standard non-linear curve)
- **NACL** (non-linear salinity curve)

Note

To set a desired TDS method, refer “P2.1 TDS curve selection” on page 29.

● Salinity calibration

Calibration is necessary for accurate salinity measurement. To perform salinity calibration using OAKTON 200 series Handheld meters, follow the procedure detailed below:

Prerequisites

- Clean the conductivity electrode with DI (deionized) water and wipe it with tissue paper.
- Switch on the EC meter and plug in the conductivity electrode.
- Prepare standard solution required for calibration.
- Press the key to keep the EC meter in **SAL** mode.
- Dip the conductivity electrode in the standard solution till the hole at the upper part of the electrode is immersed.

Note

- Before salinity calibration, set the required salinity method. In OAKTON 200 series Handheld meters, available salinity methods are;
  - **NACL**
  - **SEA.W** (Sea water)
- To set a desired salinity method, refer “P3.2 select salinity type” on page 33.
- User can adjust the salinity value by calibration.

Tip

- For second or multiple point calibration, clean the conductivity electrode with DI water and follow the same procedure.
- To abort an ongoing calibration process at any point of time, press the key.

Calibration

1. After placing the conductivity electrode in the standard solution, press the key.
2. Meter starts measuring various calibration values with a blinking on screen.
3. Wait for the to stabilize (stable calibration reading).
4. Use the ▲▼ keys to adjust the salinity value.
5. Press the **ENT** ● key to confirm and save calibration data.
6. Meter displays **DONE** indicating end of the salinity calibration procedure.

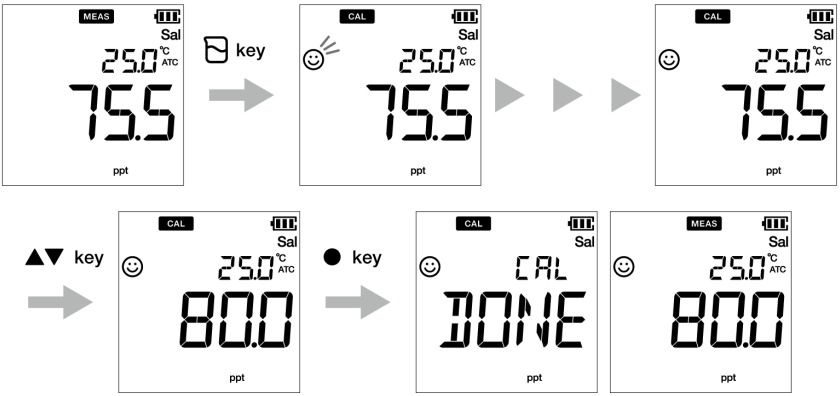

● Temperature Calibration

Temperature calibration is required to accurately match the conductivity electrode to the meter. Check the temperature reading and if its acceptable, no temperature calibration is required. If you need to calibrate, please follow the procedure detailed below:

Prerequisites

- Clean the conductivity electrode with DI (deionized) water and wipe it with tissue paper.
- Switch on the EC meter and plug in the conductivity electrode and temperature sensor.
- Dip the conductivity electrode in the standard solution till its temperature sensor is immersed.
- Wait for 5 minutes to ensure temperature stability.

Note

- Meter displays **MTC** if the temperature sensor is not plugged in and displays **ATC** if the temperature sensor is plugged in.
- Temperature calibration must be performed using a known temperature solution or against a calibrated thermometer.

Tip

To abort an ongoing calibration process at any point of time, press the key.

Calibration

1. After placing the conductivity electrode in the standard solution, press the key.
2. Press the key to switch to temperature calibration mode. Meter displays measured temperature value.
3. Use the ▲▼ keys to adjust the temperature to the required value.
4. Press the **ENT** ● key to save calibration data.
5. Meter displays **DONE** indicating end of the temperature calibration procedure.

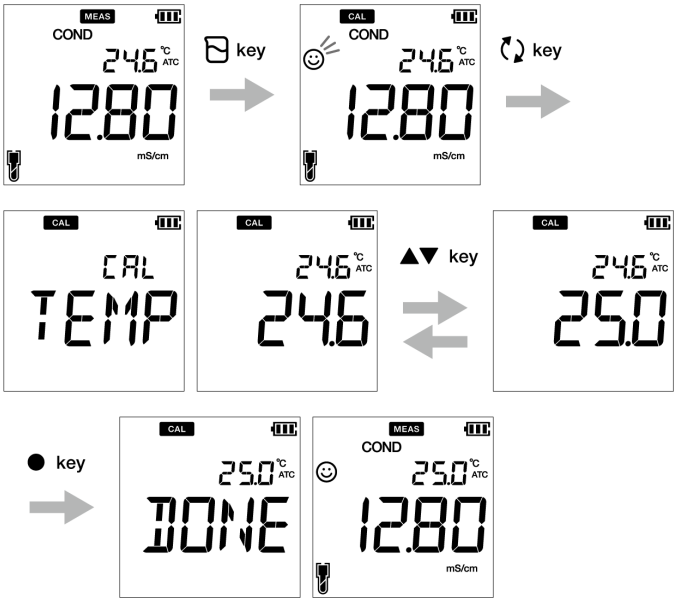

■ Data

This section describes the basic method of data storing and transferring using OAKTON 200 series Handheld meters.

● Data capture and storage

In OAKTON 200 series Handheld meters, data measured by the instrument can be stored in the internal memory.
To save the measured data:

- Press the ENT ● key to save the displayed data.
- Meter displays the saved data for 2 seconds and then the display returns to the previous screen automatically.

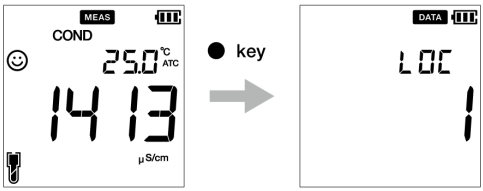

Note

- If the data storage limit reaches 500 in EC250 model or 1000 in EC260 model, memory full error occurs and MEM FULL is displayed.
- In such case, print the data or transfer necessary data to a PC (only for EC260) and delete the data from the internal memory of the instrument.

Viewing stored data

- To view stored data, press key .
- Use ▲ ▼ keys to review different stored records.
- Press key to get back to measurement mode.

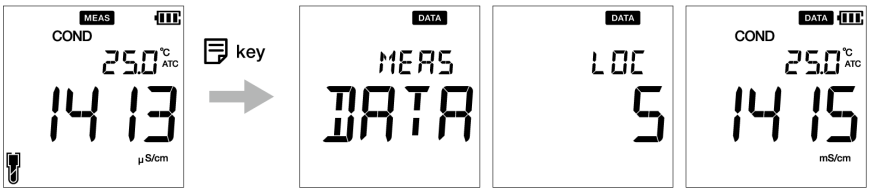

● Data transfer

● Transfer data to PC

Connect the instrument to a PC using phono jack to USB cable to transfer saved data to the PC (for OAKTON EC260 only). Connect the phono jack at the instrument side to the communication port on the PC.

● Print data

To print a desired data:

1. Being in the measurement mode, press key.
2. Use ▲ ▼ keys to view desired stored data.
3. Press ● key to print that individual data.

● Printer format- measurement

TDS

Meter Model	: OAKTON EC260
Serial Number	: 123456789
SW Revision	: 1.00
Date	: 20 Aug 2018
Time	: 10:10:28
Mode	: TDS
TDS	: 1.23 g/L
Temperature	: 25.0 C(MAN)
Electrode Status	: Excellent
User Name	:
Signature	:

Tip

To print entire stored data log, refer “P4.2 Print data setup” on page 37.

■ Setup

This section describes all the setup functions available in OAKTON 200 series Handheld meters.

● P1 COND setup

Using P1 COND setup function of the meter, you can:
- Set cell constant
- Select conductivity unit
- Set calibration mode
- Set temperature coefficient
- Set reference temperature
- Erase calibration data

To set the COND functions using OAKTON 200 series Handheld meters, follow the procedure detailed below:

Prerequisites

Switch on the EC meter.

Note

- Default cell constant value is **1.00** and you can set a value in between 0.070 to 13.00.
- Default conductivity unit is set as **S/cm**. You can change the unit to S/m.
- Default auto calibration setup is **ON** but to perform manual calibration, you need to change the setup to OFF.
- Default temperature coefficient is **2.00%**. You can set a value in between 0.00% to 10.00%.
- Default reference temperature is **25.0 °C**. You can set the value in between 15.0 °C to 30.0 °C.
- Erasing previous calibration data is recommended for accurate calibration. Default setup is **NO** but to erase the calibration data, you need to change the setup to **YES**.

Tip

To return to the measurement mode, press the key.

- **P1.1 Cell constant setup**

1. Press the key, **P1 COND** screen appears.
2. Press the **ENT** ● key, **P1.1 CELL** screen appears.
3. Press the **ENT** ● key, by default **CELL 1.00** appears.
4. Use the ▲ ▼ keys to set the cell constant in between 0.070 to 13.00.
5. Press the **ENT** ● key, **P1.1 CELL** screen appears. This indicates completion of cell constant setup.

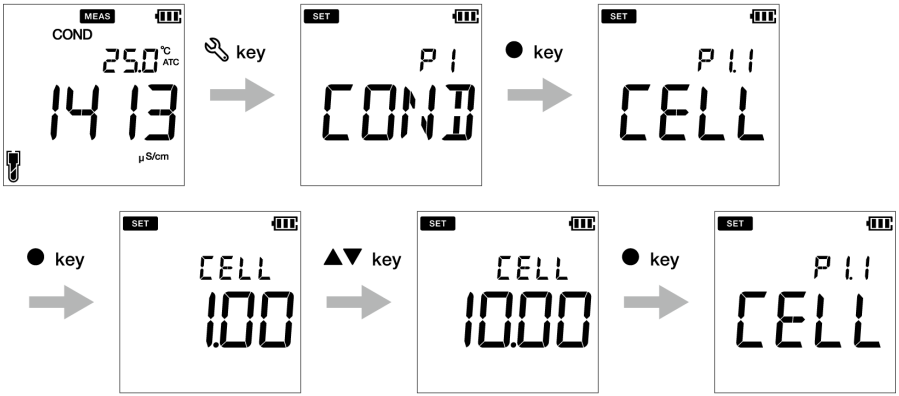

- **P1.2 Select conductivity unit**

1. Press the key, **P1 COND** screen appears.
2. Press the **ENT** key, **P1.1 CELL** screen appears.
3. Press the ▲ key, **P1.2 UNIT** screen appears.
4. Press the **ENT** key, by default **UNIT S/cm** appears.
5. Use the ▲ ▼ keys to change the conductivity unit to S/m.
6. Press the **ENT** key, **P1.2 UNIT** screen appears. This indicates completion of conductivity unit selection.

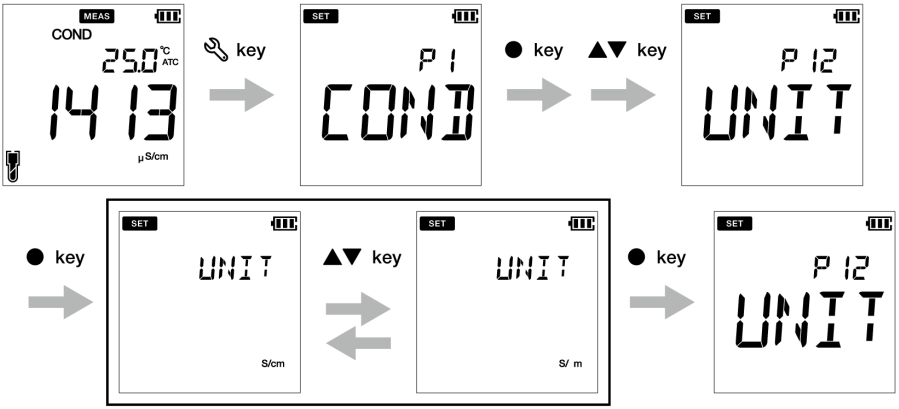

- **P1.3 calibration mode setup**

1. Press the key, **P1 COND** screen appears.
2. Press the **ENT** ● key, **P1.1 CELL** screen appears.
3. Press the ▲ key, **P1.2 UNIT** screen appears.
4. Press the ▲ key, **P1.3 A.CAL** appears.
5. Press the **ENT** ● key, **A.CAL ON** screen appears with **ON** as default setup.
6. Use the ▲ ▼ keys to change the setup to **OFF**. This enables the manual calibration mode.
7. Press the **ENT** ● key. **P1.3 A.CAL**screen appears. This indicates completion of auto calibration mode setup.

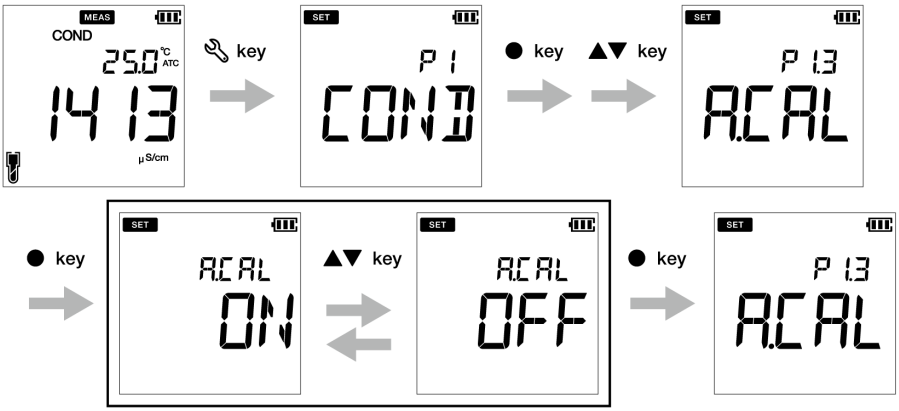

● P1.4 Temperature coefficient setup

1.Press the 🔧 key, **P1 COND** screen appears.
2.Press the **ENT** ● key, **P1.1 CELL** screen appears.
3.Press the ▲ key, **P1.2 UNIT** screen appears.
4.Press the ▲ key, **P1.3 A.CAL** appears.
5.Press the ▲ key, **P1.4 T.CFF** appears.
6.Press the **ENT** ● key, **T.CFF 2.00%** screen appears.
7.Use the ▲ ▼ keys to set the temperature coefficient in between 0.00% to 10.00%.
8.Press the **ENT** ● key. **P1.4 T.CFF** screen appears. This indicates completion of temperature coefficient setup.

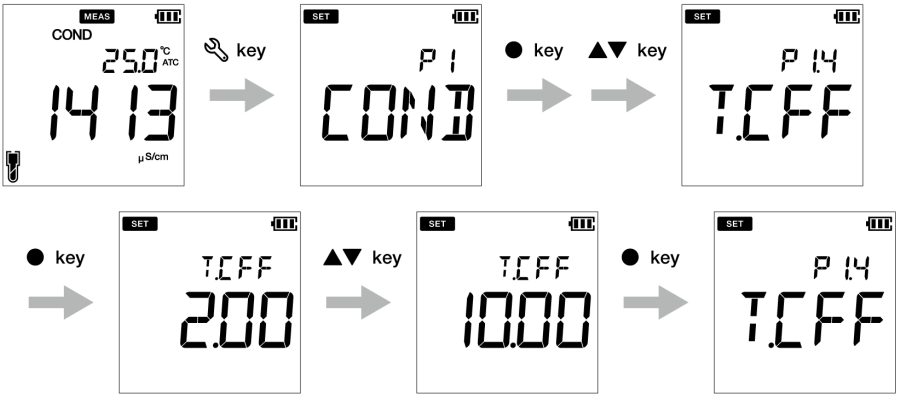

- **P1.5 Reference temperature setup**

1.Press the key, **P1 COND** screen appears.
2.Press the **ENT** ● key, **P1.1 CELL** screen appears.
3.Press the ▲ key, **P1.2 UNIT** screen appears.
4.Press the ▲ key, **P1.3 A.CAL** appears.
5.Press the ▲ key, **P1.4 T.CFF** appears.
6.Press the ▲ key, **P1.5 T.rEF** appears.
7.Press the **ENT** ● key, **T.REF 25.0°C** screen appears.
8.Use the ▲ ▼ keys to set the temperature coefficient in between 15.0°C to 30.0°C.
9.Press the **ENT** ● key. **P1.5 T.rEF** screen appears. This indicates completion of reference temperature setup.

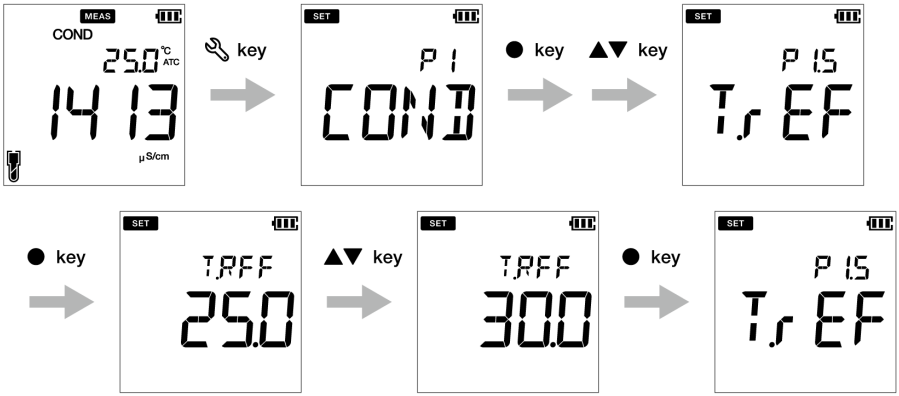

● P1.6 Erase calibration data

1.Press the 🔧 key, **P1 COND** screen appears.
2.Press the **ENT** ● key, **P1.1 CELL** screen appears.
3.Press the ▲ key, **P1.2 UNIT** screen appears.
4.Press the ▲ key, **P1.3 A.CAL** appears.
5.Press the ▲ key, **P1.4 T.CFF** appears.
6.Press the ▲ key, **P1.5 T.rEF** appears.
7.Press the ▲ key, **P1.6 C.CLr** appears.
8.Press the **ENT** ● key, **C.CLr NO** screen appears with **NO** as default setup.
9. Use the ▲ ▼ keys to change the setup to **YES**. This erases the calibration data.
10. Press the **ENT** ● key. **P1.6 C.CLr** screen appears. This indicates erasure of calibration data.

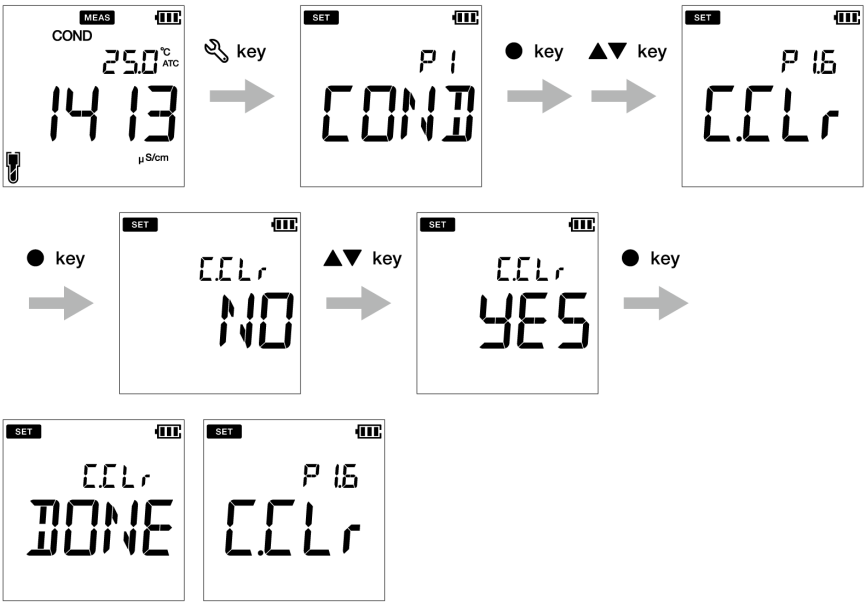

● P2 TDS setup

Using P2 TDS setup function of the meter, you can:
- Select TDS curve
- Select TDS unit

To set the TDS functions using OAKTON 200 series Handheld meters, follow the procedure detailed below:

Prerequisites

Switch on the EC meter.

Note

- Default TDS curve is **linear**. You can change the TDS curve to 442 or EN27888 or NaCl.
- For linear curve, default multiplier factor is **FACT 0.50.** You can set a multiplier factor in between 0.40 to 1.00.
- Default TDS unit is set as **mg/L** (g/L). You can change the unit to ppm (ppt).

Tip

To return to the measurement mode, press the key.

- **P2.1 TDS curve selection**

1. Press the key, **P1 COND** screen appears.
2. Press the ▲ key, **P2 TDS** screen appears.
3. Press the **ENT** ● key, **P2.1 FACT** screen appears.
4. Press the **ENT** ● key, by default **FACT LINR** appears.
5. Use the ▲ ▼ keys to select a TDS curve and press the **ENT** ● key.
6. While selecting the linear curve, set a fact in between 0.40 to 1.00.
7. Press the **ENT** ● key, **P2.1 FACT** screen appears. This indicates completion of TDS curve setup.

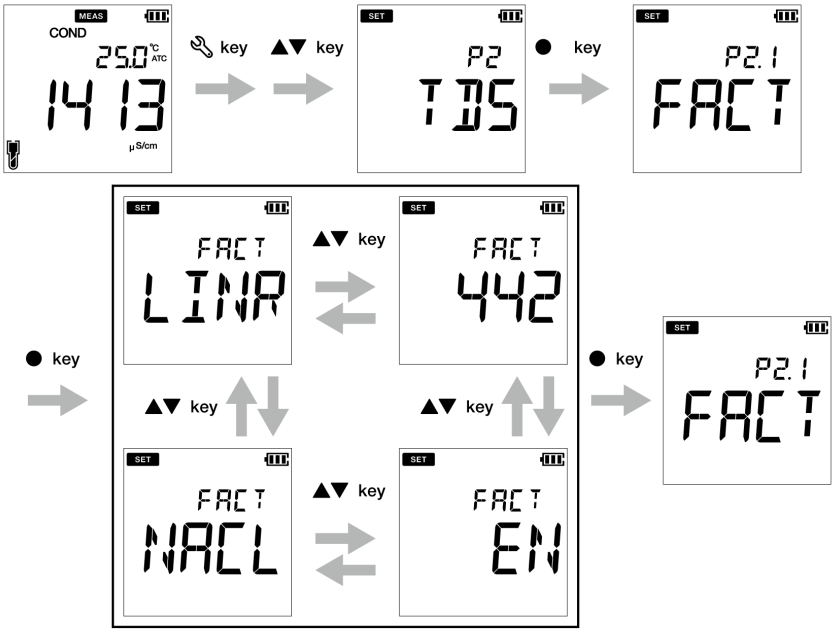

If you choose LINR, you can select a factor from 0.40 to 1.00.

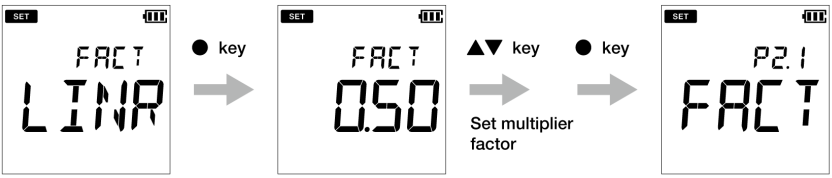

- **P2.2 Select TDS unit**

1. Press the key, **P1 COND** screen appears.
2. Press the ▲ key, **P2 TDS** screen appears.
3. Press the **ENT** ● key, **P2.1 FACT** screen appears.
4. Press the ▲ key, **P2.2 UNIT** screen appears.
5. Press the **ENT** ● key, **UNIT mg/L (g/L)** screen appears
6. Use the ▲ ▼ keys to change the TDS unit to ppm (ppt).
7. Press the **ENT** ● key, **P2.2 UNIT** screen appears. This indicates completion of TDS unit selection.

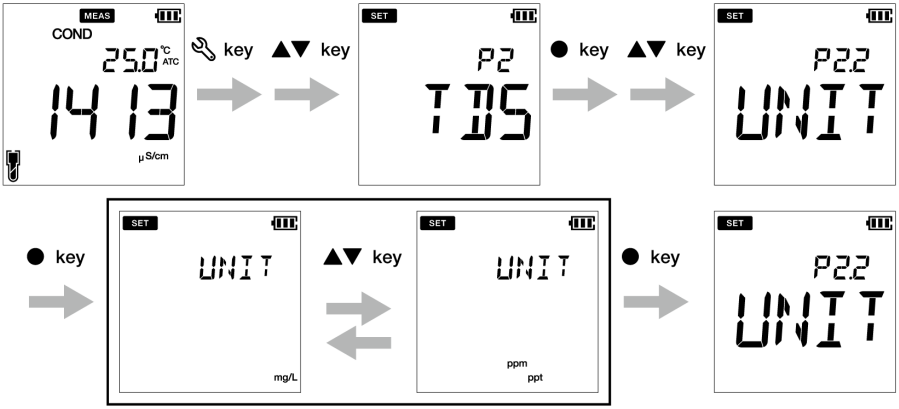

● P3 SAL setup

Using P3 SAL setups function of the meter, you can:
- Select salinity unit
- Select salinity curve
- Erase calibration data

To set the salinity functions using OAKTON 200 series Handheld meters, follow the procedure detailed below:

Prerequisites

Switch on the EC meter.

Note

- Default salinity unit is set as **ppt**. You can change the unit to **percentage (%)**.
- Default salinity type is set as **NaCl**. You can change the salinity type to seawater.
- Erasing previous calibration data is recommended for accurate calibration. Default setup is **NO** but to erase the calibration data, you need to change the setup to **YES**.

Tip

To return to the measurement mode, press the key.

- **P3.1 select salinity unit**

1. Press the 🔧 key, **P1 COND** screen appears.
2. Press the ▲ key, **P2 TDS** screen appears.
3. Press the ▲ key, **P3 SAL** screen appears.
4. Press the **ENT** ● key, **P3.1 UNIT** screen appears.
5. Press the **ENT** ● key, by default **UNIT ppt** appears.
6. Use the ▲ ▼ keys to change the salinity unit to percentage (%).
7. Press the **ENT** ● key, **P3.1 UNIT** screen appears. This indicates completion of salinity unit selection.

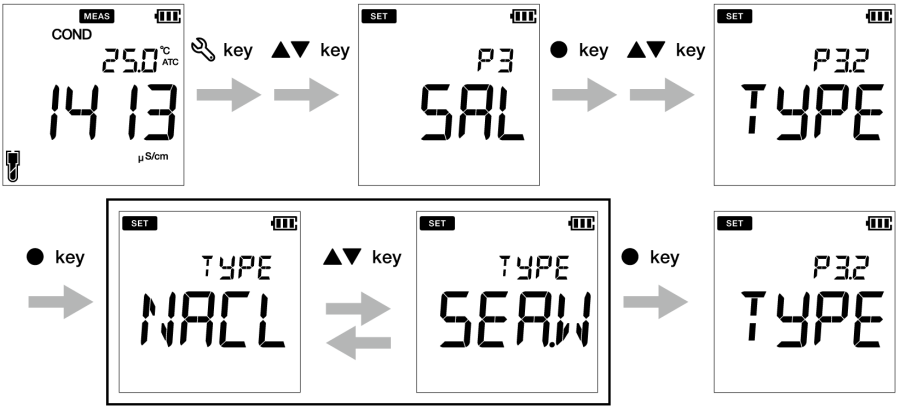

- **P3.2 select salinity type**

1. Press the key, **P1 COND** screen appears.
2. Press the ▲ key, **P2 TDS** screen appears.
3. Press the ▲ key, **P3 SAL** screen appears.
4. Press the **ENT** ● key, **P3.1 UNIT** screen appears.
5. Press the ▲ key, **P3.2 TYPE** screen appears.
6. Press the **ENT** ● key, **TYPE NACL** appears with NaCl as default setup.
7. Use the ▲▼ keys to change the salinity type to seawater.
8. Press the **ENT** ● key, **P3.2 TYPE** screen appears. This indicates completion of salinity type selection.

- **P3.3 Erase calibration data**

1. Press the key, **P1 COND** screen appears.
2. Press the ▲ key, **P2 TDS** screen appears.
3. Press the ▲ key, **P3 SAL** screen appears.
4. Press the **ENT** ● key, **P3.1 UNIT** screen appears.
5. Press the ▲ key, **P3.2 TYPE** screen appears.
6. Press the ▲ key, **P3.3 C.CLr** screen appears.
7. Press the **ENT** ● key, **C.CLr NO** appears with **NO** as default setup.
8. Use the ▲ ▼ keys to change the setup to **YES**. This erases the calibration data.
9. Press the **ENT** ● key. **P3.3 C.CLR** screen appears. This indicates erasure of calibration data.

● P4 Data setup

Using P4 Data setup function of the meter, you can:
- Set data log interval
- Set print data log
- Erase data log

To set the data functions using OAKTON 200 series Handheld meters, follow the procedure detailed below:

Note

- Default data log interval is ----, where ---- indicates “no data log interval” has been set.
- Data log interval can be set from 2 to 999 seconds.

Prerequisites

Switch on the EC meter.

Tip

To return to the measurement mode, press the key.

- **P4.1 Data log interval setup**

1. Press the 🔧 key, **P1 COND** screen appears.
2. Press the ▲ key, **P2 TDS** screen appears.
3. Press the ▲ key, **P3 SAL** screen appears.
4. Press the ▲ key, **P4 DATA** screen appears.
5. Press the **ENT** ● key, **P4.1 LOG** screen appears.
6. Press the **ENT** ● key, previously set log interval appears.
7. Use the ▲ ▼ keys to set the data log interval.
8. Press the **ENT** ● key, **P4.1 LOG** screen appears. This indicates completion of data log interval setup.

.

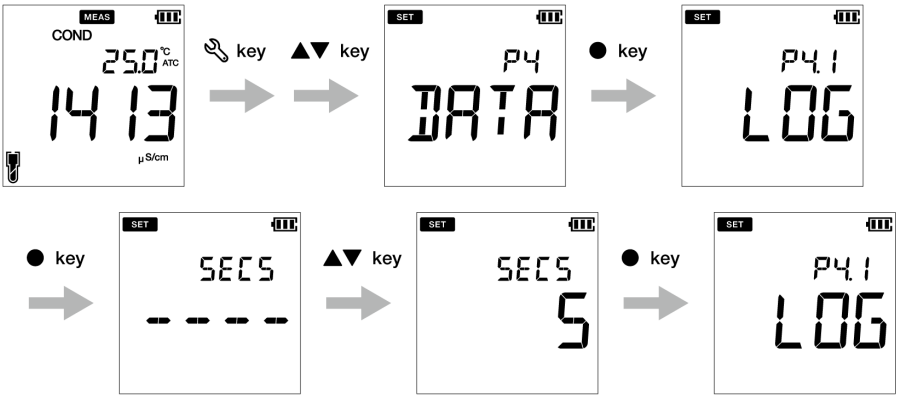

● P4.2 Print data setup

1. Press the key, **P1 COND** screen appears.
2. Press the ▲ key, **P2 TDS** screen appears.
3. Press the ▲ key, **P3 SAL** screen appears.
4. Press the ▲ key, **P4 DATA** screen appears.
5. Press the **ENT** ● key, **P4.1 LOG** screen appears.
6. Press the ▲ key, **P4.2 PrNT** screen appears.
7. Press the **ENT** ● key, default setup is **NO**.
8. Use the ▲ ▼ keys to change the setup to **YES**.
9. Press the **ENT** ● key, **P4.2 PrNT** screen appears. This indicates completion of the print data.

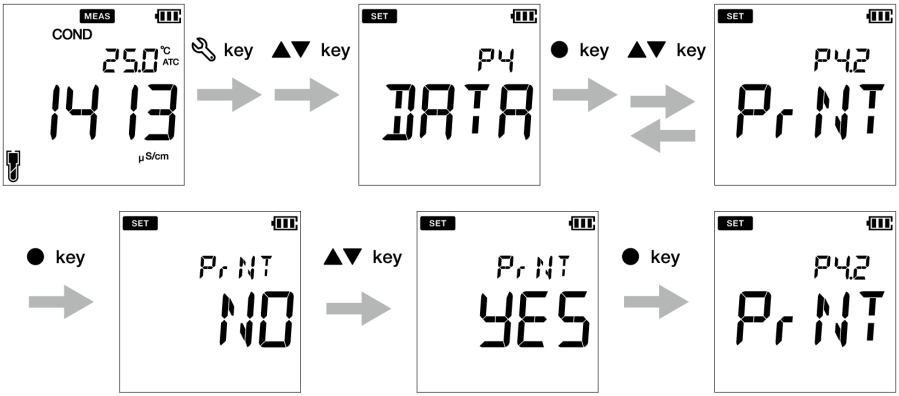

- **P4.3 Erase data**

1. Press the key, **P1 COND** screen appears.
2. Press the ▲ key, **P2 TDS** screen appears.
3. Press the ▲ key, **P3 SAL** screen appears.
4. Press the ▲ key, **P4 DATA** screen appears.
5. Press the **ENT** ● key, **P4.1 LOG** screen appears.
6. Press the ▲ key, **P4.2 PrNT** screen appears.
7. Press the ▲ key, **P4.3 D.CLR** screen appears.
8. Press the **ENT** ● key, default setup is **NO**.
9. Use the ▲ ▼ keys set it to **YES** to erase all data.
10. Press the **ENT** ● key, **P4.3 D.CLR** screen appears. This indicates erasure of all data.

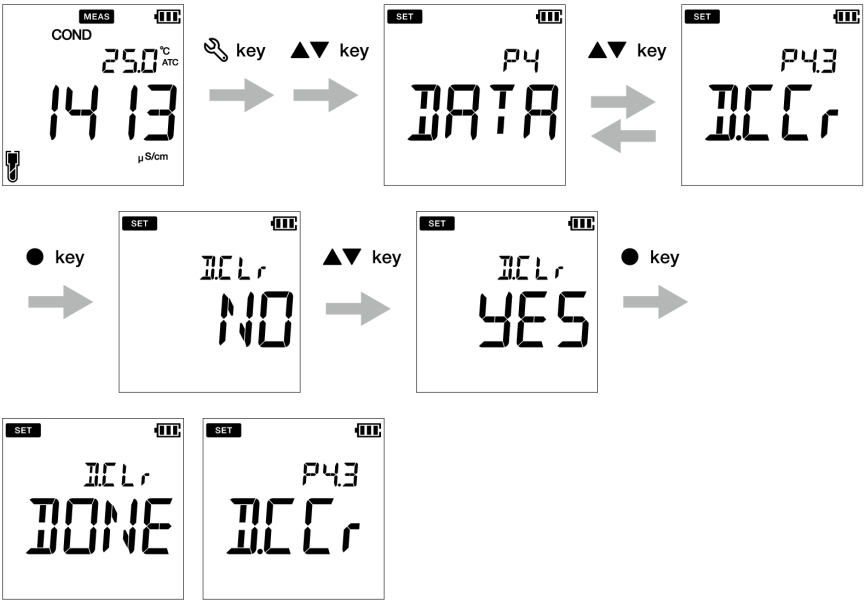

● P5 General setup

Using P5 General setup function of the meter, you can:
- Select stability mode of the meter
- Set auto shut-off time
- Select temperature unit
- Reset the meter

To set the general functions using OAKTON 200 series Handheld meters, follow the procedure detailed below:

Prerequisites

Switch on the EC meter.

Note

- In the calibration mode, the auto stable (**AS**) mode is activated.Default stability setup in measurement mode is “auto stable” (**AS**). If you like, you can change it to “auto hold” (**AH**) or “real time” (**RT**).
- Default auto shut-off time is 30 minutes. You can set the time from ---- to 30 minutes, where ---- indicates “no auto shut-off time” has been set and meter will be on continuously.
- Default temperature unit is **°C** and you can change the unit to **°F**.
- Default reset meter setup is **NO**. If you like to reset the meter, you can change it to **YES**.

Tip

- Stability judgment criteria remains same for both auto stability mode and auto hold mode.
- To return to the measurement mode, press the key.

● P5.1 Auto Stable, Auto Hold and Real Time mode setup

Auto Stable (AS) mode - the meter shows live readings ☺ annunciator blinks until the reading is stable.

Auto Hold (AH) mode - the meter locks the stable reading; ☺ annunciator blinks until reading is stable and then HOLD lights up.

Real Time (RT) mode - the meter shows live readings; Both ☺ and HOLD annunciators are inactive.

1. Press the 🔧 key, **P1 COND** screen appears.
2. Press the ▲ key, **P2 TDS** screen appears.
3. Press the ▲ key, **P3 SAL** screen appears.
4. Press the ▲ key, **P4 DATA** screen appears.
5. Press the ▲ key, **P5 GEN** screen appears.
6. Press the **ENT** ● key, **P5.1 STBL** screen appears.
7. Press the **ENT** ● key, Default the stability mode is **AS** (auto stable).
8. Use the ▲ ▼ keys to change the stability mode as **AH** (auto hold) or **RT** (real time).
9. Press the **ENT** ● key, **P5.1 STBL** screen appears. This indicates completion of the stability mode selection.

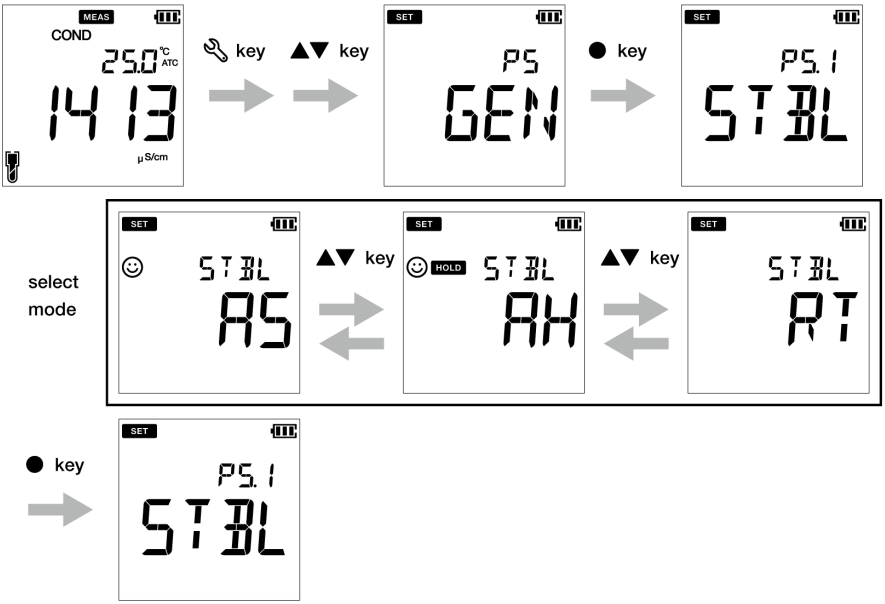

● P5.2 Auto shut-off time setup

1. Press the 🔧 key, **P1 COND** screen appears.
2. Press the ▲ key, **P2 TDS** screen appears.
3. Press the ▲ key, **P3 SAL** screen appears.
4. Press the ▲ key, **P4 DATA** screen appears.
5. Press the ▲ key, **P5 GEN** screen appears.
6. Press the **ENT** ● key, **P5.1 STBL** screen appears.
7. Press the ▲ key, **P5.2 A.OFF** screen appears.
8. Press the **ENT** ● key, default auto shut-off time is **30 minutes**.
9. Use the ▲ ▼ keys to adjust the auto off time.
10. Press the **ENT** ● key, **P5.2 A.OFF** screen appears. This indicates completion of the auto shut-off time setup.

Note

The default shut off time is 30 minutes. This can be adjusted from 1 minute to 30 minutes. If you set the display to '----' it indicates Auto Off is disabled. Meter will be on indefinitely till the user switches off the meter.

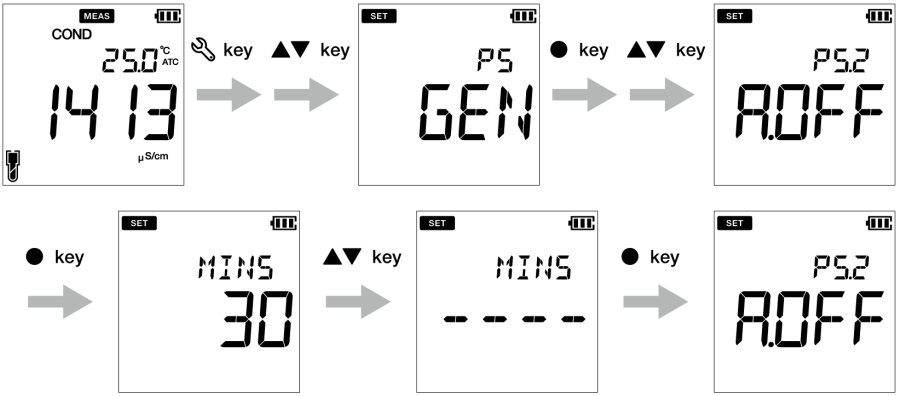

- **P5.3 Temperature unit setup**

1. Press the key, **P1 COND** screen appears.
2. Press the ▲ key, **P2 TDS** screen appears.
3. Press the ▲ key, **P3 SAL** screen appears.
4. Press the ▲ key, **P4 DATA** screen appears.
5. Press the ▲ key, **P5 GEN** screen appears.
6. Press the **ENT** ● key, **P5.1 STBL** screen appears.
7. Press the ▲ key, **P5.2 A.OFF** screen appears.
8. Press the ▲ key, **P5.3 °C°F** screen appears.
9. Press the **ENT** ● key, default temperature unit is **°C**.
10. Use the ▲ ▼ keys to change the unit to **°F**.
11. Press the **ENT** ● key, **P5.3 °C°F** screen appears. This indicates completion of the end temperature unit selection.

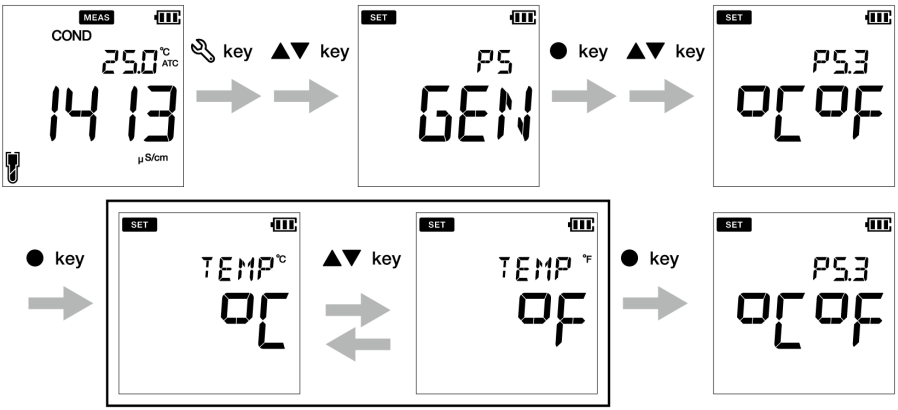

- **P5.4 Reset Meter**

1. Press the 🔧 key, **P1 COND** screen appears.
2. Press the ▲ key, **P2 TDS** screen appears.
3. Press the ▲ key, **P3 SAL** screen appears.
4. Press the ▲ key, **P4 DATA** screen appears.
5. Press the ▲ key, **P5 GEN** screen appears.
6. Press the **ENT** ● key, **P5.1 STBL** screen appears.
7. Press the ▲ key, **P5.2 A.OFF** screen appears.
8. Press the ▲ key, **P5.3 °C°F** screen appears.
9. Press the ▲ key, **P5.4 r.SET** screen appears.
10. Press the **ENT** ● key, default meter re-setup is **NO**.
11. Use the ▲ ▼ key to set it **YES**.
12. Press the **ENT** ● key. Meter displays **DONE** and automatically switches off.

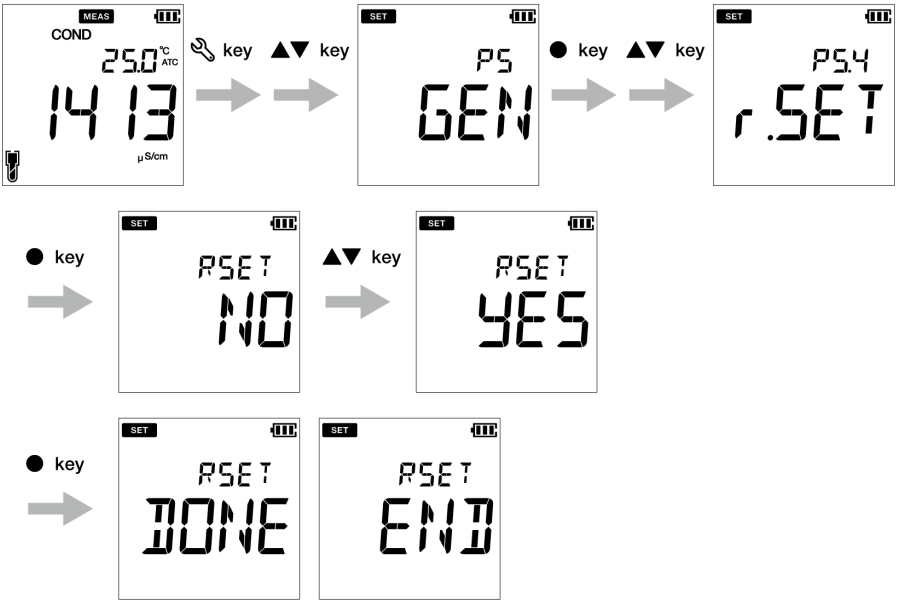

● P6 CLK setup

Real-time clock functionality is available only for OAKTON 200 series Handheld meters. Using P4 Clock setup function of the meter, you can set:

- Date
- Time

To set the clock function using OAKTON 200 series Handheld meters, follow the procedure detailed below:

Prerequisites

Switch on the EC meter.

Note

- Date and time setup is necessary before using the instrument for the first time or after replacing the batteries.
- Set date and time data is captured and the correct time and date information will be attached to all data stored.

Tip

To return to the measurement mode, press the key.

● P6.1 Date setup

1. Press the 🔧 key, **P1 COND** screen appears.
2. Press the ▲ key, **P2 TDS** screen appears.
3. Press the ▲ key, **P3 SAL** screen appears.
4. Press the ▲ key, **P4 DATA** screen appears.
5. Press the ▲ key, **P5 GEN** screen appears.
6. Press the ▲ key, **P6 CLK** screen appears.
7. Press the **ENT** ● key, **P6.1 DATE** screen appears.
8. Press the **ENT** ● key, default set year appears.
9. Use the ▲ ▼ keys to adjust the year.
10. Press the **ENT** ● key, default set month appears.
11. Use the ▲ ▼ keys to adjust the month.
12. Press the **ENT** ● key, default set day appears.
13. Use the ▲ ▼ keys to adjust the day.
14. Press the **ENT** ● key, **P6.1 DATE** screen appears. This indicates completion of the date setup.

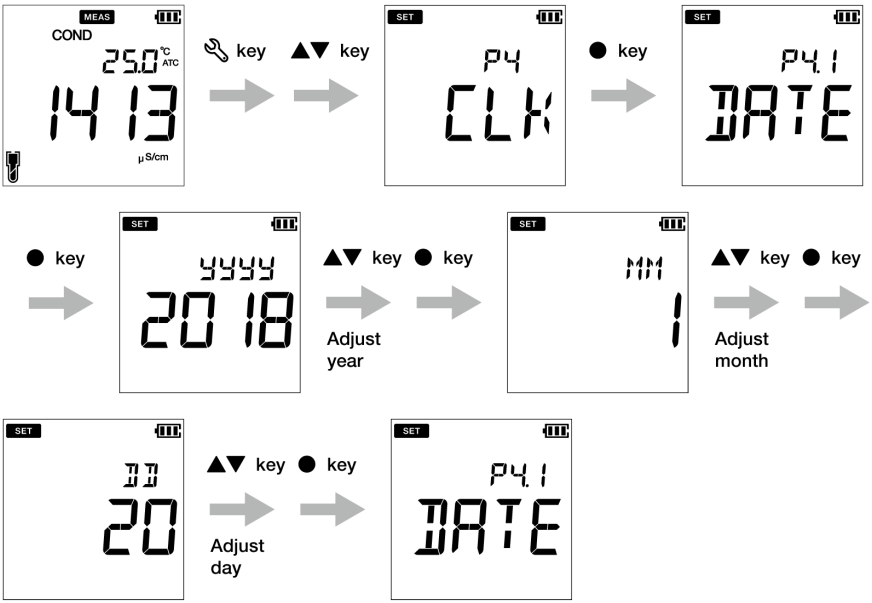

● P6.2 Time setup

1. Press the 🔧 key, **P1 COND** screen appears.
2. Press the ▲ key, **P2 TDS** screen appears.
3. Press the ▲ key, **P3 SAL** screen appears.
4. Press the ▲ key, **P4 DATA** screen appears.
5. Press the ▲ key, **P5 GEN** screen appears.
6. Press the ▲ key, **P6 CLK** screen appears.
7. Press the **ENT** ● key, **P6.1 DATE** screen appears.
8. Press the ▲ key, **P6.2 TIME** screen appears.
9. Press the **ENT** ● key, default set hour appears.
10. Use the ▲ ▼ keys to adjust the hour.
11. Press **ENT** ● key, default set minute appears.
12. Use the ▲ ▼ keys to adjust the minute.
13. Press **ENT** ● key, **P6.2 TIME** screen appears. This indicates completion of the time setup.

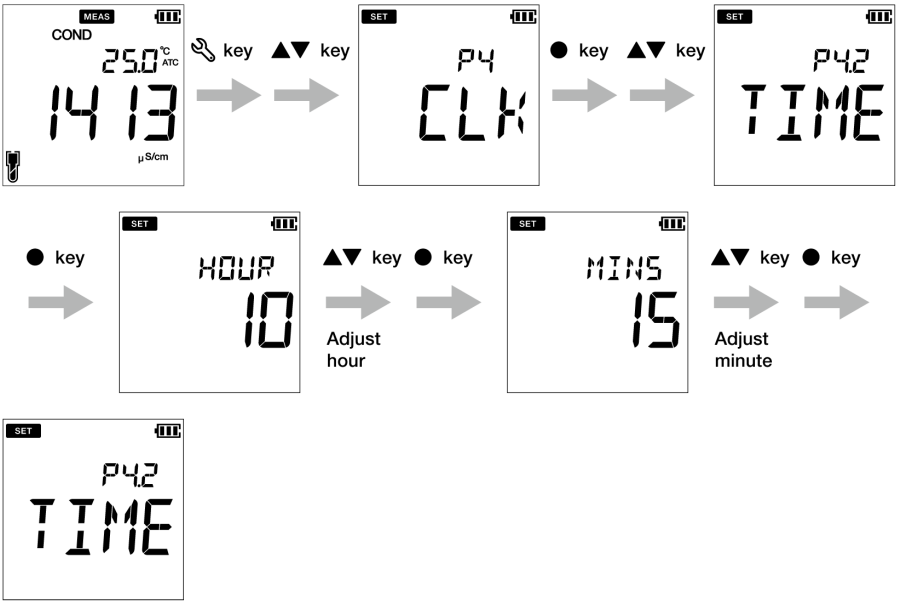

■ Maintenance and storage

This section describes maintenance of OAKTON 200 series Handheld meters, conductivity electrodes used with the meter.

● Contact for maintenance

Please contact your dealer for the product maintenance.

● Maintenance and storage of the instrument

● How to clean the instrument

- If the instrument is dirty, wipe it gently with a soft dry cloth. If it is difficult to remove the dirt, wipe it gently with a cloth moistened with alcohol.
- The instrument is made of solvent resistant materials but is not resistant to all chemicals. Do not dip the instrument in strong acid or alkali solution, or wipe it with such solution.
- Do not wipe the instrument with a polishing powder or other abrasive compound.

● Environmental conditions for storage

- Temperature: 0 °C to 45 °C
- Humidity: under 80% in relative humidity and free from condensation

● Avoid the following conditions

- Dusty place
- Strong vibration
- Direct sunlight
- Corrosive gas environment
- Close to an air-conditioner
- Direct wind

● Maintenance and storage of the conductivity electrode

This section describes an overview of the procedures for maintenance and storage of conductivity electrode.

● How to clean the electrode

Always clean the electrode with deionized water after every measurement. When the response is slow or residue from the sample adheres to the electrode, use the appropriate method below to clean the electrode, and then clean again with deionized water.

Type of dirt	Cleaning solution
General	Diluted neutral cleaning solution
Inorganic substance	Ethanol
Scale that formed during long term storage	A commercially available scale remover (neutral cleansing solution for kitchen use, etc.) diluted by a factor of 100. If this does not remove the scale, use diluted solution that contains oxygen bleach (sodium percarbonate) or chlorine bleach (sodium hypochlorite).

● Daily storage of the electrode

If the electrode is stored in a dry state, the cell constant will change. Store with the black electrode part immersed in deionized water, or with the protective cap filled with deionized water and attached to the electrode.

● When the electrode will not be used for a long period

To store the electrode for a long period, clean it well and attach the protective cap filled with deionized water.

■ Error messages and trouble shooting

● Error message

This section describes the causes of typical errors and the actions to be taken to resolve respective errors.

If ERR is displayed while you are using the instrument, check the error, its cause and action to be taken in the error list below.

Meter display	ERR description	Cause of error and How to solve the problem
BATT LOW	Low battery	Battery power is low. Please replace with new batteries.
SLPE ERR	Slope error	Electrode sensitivity is low. Please clean and recalibrate with fresh standard solution. If the problem persists, replace the electrode with new one.
STD ERR	Can not auto recognize standard solution	The instrument cannot identify the standard solution. Check the calibration solution and use fresh one if required.
	Calibration interval alarm	Exceeds the calibration interval setup. Calibrate the meter.
MEM FULL	Memory data full	The number of the data saved has exceeded the specified number of items. Print or transfer the data. Or, clear stored data.
ERR	If user press the enter key before stable in calibration mode	● key is pressed before the calibration value get stabilized. Wait for the value to be stable and then press the ● key.

● Troubleshooting

This section describes causes and actions to take for problems that customers frequently ask.

The indicated value fluctuates

< Problem with the electrode >

Cause	How to solve problem
The conductivity electrode is dirty.	Clean the conductivity cell.
The conductivity electrode is broken.	Replace the conductivity cell.
There are air bubbles between the conductivity electrode sleeve and metal rings.	Shake the conductivity electrode to remove the air bubbles.

< Problem with the instrument >

Cause	How to solve problem
There is a motor or other device causing electrical interference.	Measure at a place where no influence from induction is given. Ground all AC-powered equipment.
The conductivity electrode is not connected correctly.	Connect the conductivity electrode properly.

< Problem with the sample >

Cause	How to solve problem
Some effects of the sample.	Response time may slow down, depending on the properties of the sample solution.

The response is slow

Cause	How to solve problem
The conductivity electrode is dirty.	Clean the conductivity cell.
The conductivity electrode is broken.	Replace the conductivity cell.
Some effects of the sample.	Response time may slow down, depending on the properties of the sample solution.

The indicated value does not change/No response

Cause	How to solve problem
The conductivity electrode is broken.	Replace the conductivity cell.
The conductivity electrode is not connected correctly.	Connect the conductivity electrode properly.
The instrument is in HOLD state.	Cancel the HOLD state.
Instrument defect.	Consult your dealer.

The measured value is out of the measurement range

When the measured value is below the display range, “Ur” appears. When the measured value is over the display range, “Or” appears.

Cause	How to solve problem
Sample is out of the measurement range.	Use a sample within the measurement range.
The conductivity electrode cable is broken.	Replace the electrode.
Cell constant is not set.	Set the cell constant.
Calibration is not performed or performed incorrectly.	Perform calibration correctly.
Instrument defect.	Check as explained below.

Repeatability of the measured value is poor

Cause	How to solve problem
Effect of the sample solution.	Repeatability becomes poor as the conductivity value of the sample changes over time.
The conductivity electrode is dirty.	Clean the conductivity electrode.
The conductivity electrode is broken.	Replace the conductivity electrode.

Nothing appears when the power is turned ON

Cause	How to solve problem
Power is not supplied.	Insert batteries.
Battery polarity (+, –) is reversed.	Insert the batteries with the polarity (+, –) correctly oriented.
Battery life is low.	Replace the batteries.
Instrument defect.	Consult your dealer.

Swelling of keypad

Cause	How to solve problem
Using the instrument at high elevation or other location where the air pressure is different from sea level.	To eliminate the pressure difference between the inside and outside of the instrument, briefly open and then close the serial cable cover. After opening, correctly close the cover to maintain dust and water proofing.
Instrument defect.	Consult your dealer.

Part of the display is missing

Cause	How to solve problem
Instrument defect.	Check the display in full screen state when turning ON the power of the instrument.

■ Appendix

● Appendix 1

This section describes technical information and option for OAKTON EC200 handheld meters.

● Conductivity standard values at various temperatures

Temp. (°C)	Conductivity value at 25°C			
	84 (μS/cm)	1413 (μS/cm)	12.88 (mS/cm)	111.8 (mS/cm)
0	64	776	7.15	65.4
5	65	896	8.22	74.1
10	67	1020	9.33	83.2
15	68	1147	10.48	92.5
16	70	1173	10.72	94.4
17	71	1199	10.95	96.3
18	73	1225	11.19	98.2
19	74	1251	11.43	100.2
20	76	1278	11.67	102.1
21	78	1305	11.91	104.0
22	79	1332	12.15	105.9
23	81	1359	12.39	107.9
24	82	1386	12.64	109.8
25	84	1413	12.88	111.8
26	86	1440	13.13	113.8
27	87	1467	13.37	115.7
28	89	1494	13.62	117.7
29	90	1521	13.87	119.7
30	92	1548	14.12	121.8
31	94	1575	14.37	123.9

● Appendix 2

Printer format - Measurement

Conductivity

Meter Model	: OAKTON EC260
Serial Number	: 123456789
SW Revision	: 1.00
Date	: 20 Aug 2018
Time	: 10:10:28
Mode	: Conductivity
Cond	: 1413.uS/cm
Temperature	: 25.0 C (MAN)
Electrode Status	: Excellent
User Name	:
Signature	:

Resistivity

Meter Model	: OAKTON EC260
Serial Number	: 123456789
SW Revision	: 1.00
Date	: 20 Aug 2018
Time	: 10:10:28
Mode	: Resistivity
Resistivity	: 1000 M-0hm/cm
Temperature	: 25.0 C(MAN)
Electrode Status	: Excellent
User Name	:
Signature	:

Salinity

Meter Model	: OAKTON EC260
Serial Number	: 123456789
SW Revision	: 1.00
Date	: 20 Aug 2018
Time	: 10:10:28
Mode	: Salinity
Salinity	: 50.0 ppt
Temperature	: 25.0 C(MAN)
Electrode Status	: Excellent
User Name	:
Signature	:

TDS

Meter Model	: OAKTON EC260
Serial Number	: 123456789
SW Revision	: 1.00
Date	: 20 Aug 2018
Time	: 10:10:28
Mode	: TDS
TDS	: 1.23 g/L
Temperature	: 25.0 C(MAN)
Electrode Status	: Excellent
User Name	:
Signature	:

Printer format - Data log

Meter Model	: OAKTON EC260
Serial Number	: 123456789
SW Revision	: 1.00
User Name	:
Signature	:
Logged Data	
Location	: 2
Date	: 10 Aug 2018
Time	: 10:10:28
Mode	: pH
pH	: 7.00 pH
mV	: 0.0 mV
Temperature	: 25.0 C(MAN)
Electrode Status	: Excellent
Location	: 1
Date	: 10 Aug 2018
Time	: 10:09:28
Mode	: mV
mV	: 178.0 mV
Temperature	: 25.0 C(MAN)

Printer format - Calibration

EC

Meter Model	: OAKTON EC260
Serial Number	: 123456789
SW Revision	: 1.00
Date	: 20 Aug 2018
Time	: 10:10:28
Calibration data	
Cal Date	: 20 Jun 2018
Cal Time	: 10:10:10
Cal Points	: 84.0 uS. 1413 uS
Avg Cal Factor	: 1.022
Cal Temperature	: 25.0 C(ATC)
Electrode Status	: Excellent
User Name	:
Signature	:

● Appendix 3

Model	EC250	EC260
	EC/TDS/Res/Sal/Temp (°C/°F)	
Conductivity Range	µS/cm to 200.0 mS/cm (k=1.0)	
Resolution	0.05% full scale	
Accuracy	±0.6% full scale, ±1.5% full scale > 18.0 mS/cm	
Reference Temperature	15 to 30 °C (adjustable)	
Temperature Coefficient	0.00 to 10.00 %/°C	
Cell Constants	0.1, 1.0, 10.0	
Calibration Points	Up to 4 (Auto) / Up to 5 (Manual)	
Units	S/cm, S/m (Auto Ranging)	
Total Dissolved Solids (TDS) Range	ppm to 100 ppt (TDS factor=0.5)	
Resolution	0.01 ppm (mg/L) / 0.1 ppt (g/L)	
Accuracy	±0.1% full scale	
TDS Curves	Linear (0.40 to 1.00), EN27888, 442, NaCl	
Resistivity Range	0.000 Ω•cm to 20.0 MΩ cm	
Resolution	0.05% full scale	
Accuracy	±0.6% full scale, ±1.5% full scale > 1.80 MΩ•cm	
Salinity Range	0.0 to 100.0 ppt / 0.00 to 10.00 %	
Resolution	0.1 ppt / 0.01%	
Accuracy	±0.2% full scale	
Salinity Curves	NaCl, Seawater	
Calibration Option	Yes	
Temperature Range	-30.0 to 130.0 °C / -22.0 to 266.0 °F	
Resolution	0.1 °C / °F	
Accuracy	± 0.5 °C / ± 0.9 °F	
Calibration Option	Yes	
Memory	500	1000
Auto Data Log	●	●
Real-time Clock	-	●
Date & Time Stamp	-	●
Auto Hold / Auto Stable / Real Time	●	●
Auto Shut-Off (1 to 30 mins.)	●	●
Electrode Status	●	●
Diagnostic Messages	●	●
Software Upgrade*1	●	●

PC Communication*1	-	●
Printer Communication*2	-	●
Meter Inputs	BNC, phono	
Display	Custom LCD with backlight	
Housing	IP67, shock & scratch resistant, non-slip	
Power Requirement	2 × AA batteries	
Battery Life	> 500 hours	
Dimensions	160 (L) × 80 (W) × 40.60 (H) mm	
Weight	Approx. 260 g (with batteries) / 216 g (without batteries)	

*1 Via PC (USB) cable
*2 Via Printer (RS232) cable

● Table of conductivity cell range

・Unit: S/m

Range	Cell constant		
	1000 m^{-1}	100 m^{-1}	10 m^{-1}
20.0 to 200.0 S/m			
2.00 to 19.99 S/m			
0.200 to 1.999 S/m			
20.0 to 199.9 mS/m			
2.00 (0.00) to 19.99 mS/m			
0.200 (0.000) to 1.999 mS/m			
0.0 to 199.9 μS/m			

・Unit: S/cm

Range	Cell constant		
	10 cm^{-1}	1 cm^{-1}	0.1 cm^{-1}
0.200 to 2.000 S/cm			
20.0 to 199.9 mS/cm			
2.00 to 19.99 mS/cm			
200 to 1999 μS/cm			
20.0 (0.0) to 199.9 μS/cm			
2.00 (0.00) to 19.99 μS/cm			
0.000 to 1.999 μS/cm			

● Table of conductivity cell range (resistivity range)

・Unit: Ω·m

Range	Cell constant		
	10 m^{-1}	100 m^{-1}	1000 m^{-1}
0.200 to 2.000 MΩ·m			
20.0 to 199.9 kΩ·m			
2.00 to 19.99 kΩ·m			
0.200 to 1.999 kΩ·m			
20.0(0.0) to 199.9 Ω·m			
2.00(0.00) to 19.99 Ω·m			
0.000 to 1.999 Ω·m			

・Unit: Ω·cm

Range	Cell constant		
	0.1 cm^{-1}	1 cm^{-1}	10 cm^{-1}
20.0 to 200.0 MΩ·cm			
2.00 to 19.99 MΩ·cm			
0.200 to 1.999 MΩ·cm			
20.0 to 199.9 kΩ·cm			
2.00 (0.00) to 19.99 kΩ·cm			
0.200 (0.000) to 1.999 kΩ·cm			
0.0 to 199.9 Ω·cm			

Oakton Instruments

625 East Bunker Court, Vernon Hills, IL, 60061, USA
Tel: 1-888-462-5866
Fax: 1-847-247-2984
info@4oakton.com
www.4oakton.com

For any questions regarding this product, please contact your local agency